NE 1/4, SE 1/4, SEC. 29, T. 31 N., R.05 E., W.M.
CITY OF MARYSVILLE, SNOHOMISH COUNTY, WASHINGTON

GENERAL NOTES

All rough grading shall be positive, draining away from all structures.

All stones larger than 1.5" diameter shall be removed from the growing medium.

Topsoil shall be provided in accordance to BMP T5.13 WSDOE Stormwater Management Manual for Western Washington.

All bed areas to receive 2" of fine ground fir or hemlock bark, composition mulches are not an acceptable alternative.

Trees and shrubs are to be planted at a depth 3/4" higher than the level that they were grown in the nursery.

Bark mulch is not to be placed above the root crown.

All plants shall at least conform to the minimum standard established by the american association of nurserymen.

Lawn areas are to be hydroseeded per manufacturer's specifications, OR EQUIVALENT. Remove all stones larger than 1" from lawn areas.

Equivalent plant material substitutions may be allowed with prior approval by the Landscape Architect.

If the site work is different than shown on the Landscape Plan, or poor soils and debris are discovered, requiring changes to the Landscape Plan, contact the Landscape Architect for instruction.

The Landscape Contractor is responsible for maintaining the landscape during installation, until final acceptance by the owner's representative.

The Landscape Contractor shall warranty all materials and workmanship for a period of one year, from the time of final acceptance.

During the warranty period, the Landscape Contractor will not be responsible for plant death caused by unusual climatic conditions, vandalism, theft, fire, or poor maintenance practices. The Landscape Architect shall have sole authority to determine the cause of death.

Planting plan takes precedent when there is a discrepancy between plant quantities in the plant schedule and the plan.

IRRIGATION ASSESSMENT

Automatic irrigation system shall be provided with final landscape plan.

LANDSCAPE MAINTENANCE PER MMC 22C.120.180

(1) All landscaped areas and plants required by this chapter must be permanently maintained in a healthy growing condition in order to accomplish the purpose for which they were required.

(2) Dead or diseased plants must be replaced within 30 days of notification, or as soon as practical in regard to freezing weather, or complex situations involving the removal and replacement of large trees.

(3) All landscaped areas must be kept free of debris and weeds.

(4) Plant material must not interfere with public utilities, restrict pedestrian or vehicular access, or constitute a traffic hazard.

(5) Planted areas next to pedestrian walkways and sidewalks shall be maintained or plant material chosen to maintain a clear zone between three and eight feet from ground level.

(6) The owners, their agents and assigns are responsible for providing, protecting, and maintaining all landscaping material in a healthy and growing condition, replacing it when necessary, and keeping it free of refuse and debris.

(7) All fencing, walls and other features used for screening purposes shall be kept free of litter, debris, and weeds.

TREE PROTECTION

All vehicle traffic shall be routed away from significant trees during construction to avoid excessive soil compaction. Where vehicular traffic is required the soil shall be protected with a 10" layer of woodchips and/or plywood placed over the path of the vehicle. The woodchips may be removed when no longer needed.

All significant trees to be saved and/or retained shall be protected with a 5' high chainlink or plastic net fencing placed 5' beyond tree driplines during construction. The fencing shall not be removed without the authorization of the consulting arborist or site supervisor.

Trenching within tree driplines shall be avoided. Tunneling around primary tree roots is permitted when disturbance within driplines is necessary.

Stump pulling of all trees to be removed in the vicinity of significant trees to be retained shall be avoided.
Stump grinding is permitted as necessary.

It may be necessary to provide supplemental irrigation during dry periods within the construction process, and mulching over the roots of any or all preserved trees.

PARKING LOT LANDSCAPING

PER MMC 22C.120.130
Parking Lot Area = 111,392 SF
10% landscaping required = 11,140 SF
Landscaping Provided = 16,438 SF

PARKING/DISPLAY AREA
Takeoff: 111,392 sf

PARKING LOT LANDSCAPING - TYPE L4
Takeoff: 16,438 sf

L3 BUFFER
Takeoff: 3,389 sf

L2 BUFFER
Takeoff: 3,582 sf

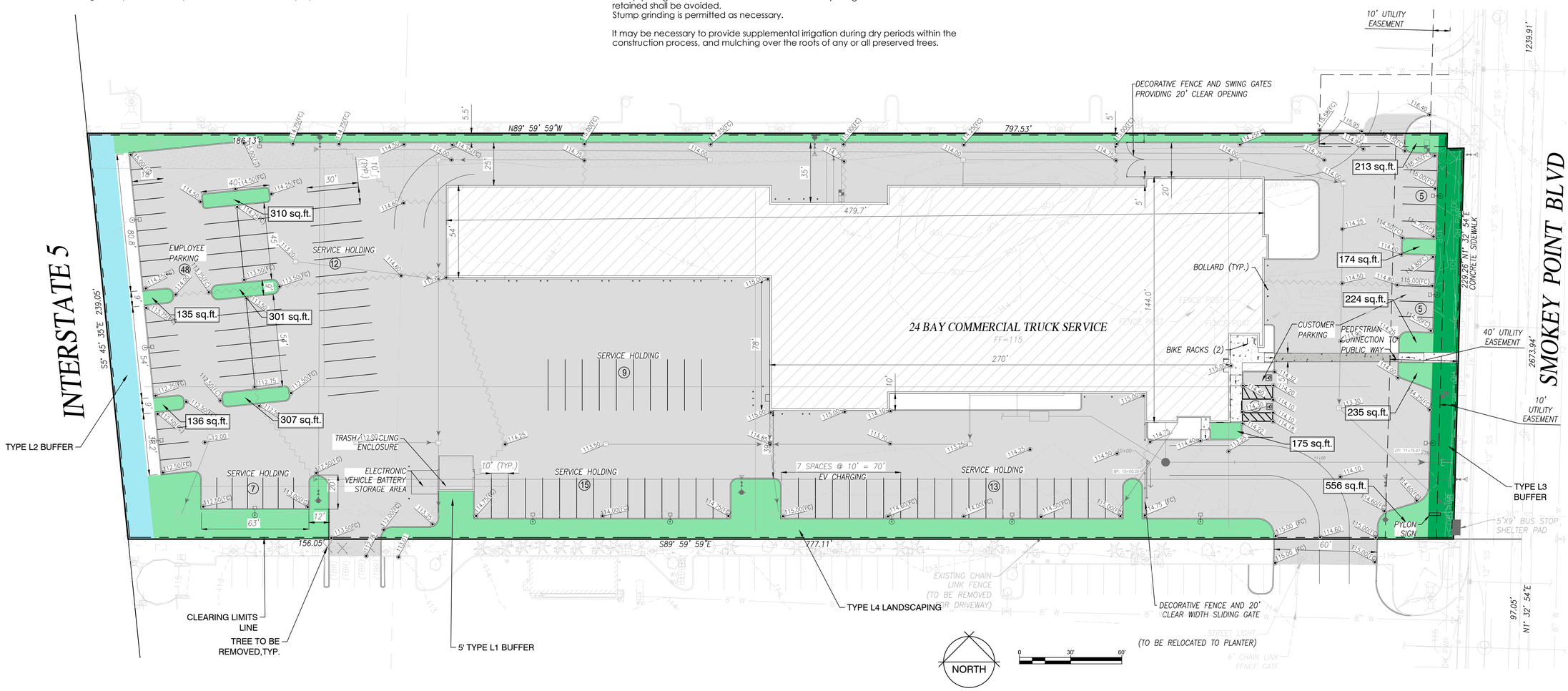

ORIGIN
DESIGN GROUP
1031 185TH AVE NE
SNOHOMISH, WA 98290
TEL: 425.346.1905

STATE OF WASHINGTON LICENSED LANDSCAPE ARCHITECT
KRYSTAL LOWE
LICENCE NO. 1206

REVISIONS:

#	DESCRIPTION	DATE

KENDALL FORD PRO ELITE COMMERCIAL VEHICLE SERVICE CENTER
16100 SMOKEY POINT BLVD
MARYSVILLE, WA 98271
PARCEL: 31052900400600
PFN: PA-21055

DRAWING TITLE:
LANDSCAPE PLAN

APPLICANT:
KENDALL AUTO GROUP
8854 W. EMERALD ST, SUITE 260
BOISE, ID 83704
(541) 335-4585

DRAWING INFORMATION
ODG PROJECT #: 23-480
DRAWN BY: KL
CHECKED BY: KL

DATE:
OCTOBER 16, 2023

SHEET NO.
L-1
OF 4

NE 1/4, SE 1/4, SEC. 29, T. 31 N., R.05 E., W.M.
CITY OF MARYSVILLE, SNOHOMISH COUNTY, WASHINGTON

PLANT SCHEDULE

DECIDUOUS TREES	QTY	BOTANICAL NAME	COMMON NAME	SIZE	CONTAINER
	28	Acer platanoides `Crimson Sentry`	Crimson Sentry Norway Maple	2" Cal.	B&B
	11	Acer rubrum `Bowhall`	Bowhall Red Maple	2" Cal.	B&B
	8	Amelanchier x grandiflora `Autumn Brilliance`	Autumn Brilliance Apple Serviceberry	2" Cal.	B&B
	16	Cornus kousa chinensis	Chinese Dogwood	2" Cal.	B&B
	2	Prunus cerasifera `Cripoizam`	Crimson Pointe™ Purple-leaf Plum	2" Cal.	B&B
	11	Zelkova serrata `JFS-KW1`	City Sprite® Japanese Zelkova	2" Cal.	B&B

EVERGREEN TREES	QTY	BOTANICAL NAME	COMMON NAME	SIZE	CONTAINER
	1	Chamaecyparis nootkatensis 'Pendula'	Weeping Nootka Cypress	6` Ht.	B&B
	1	Chamaecyparis obtusa 'Gracilis'	Slender Hinoki False Cypress	10` Ht.	B&B
	6	Thuja occidentalis `Fastigiata`	Pyramidal Arborvitae	6` HT	B&B
	4	Thuja plicata `Excelsa`	Western Red Cedar	6` HT	B&B

SHRUBS	QTY	BOTANICAL NAME	COMMON NAME	SIZE	CONTAINER
	2	Berberis thunbergii 'Crimson Pygmy'	Crimson Pygmy Japanese Barberry	2 gal.	Pot
	2	Berberis thunbergii 'Orange Rocket'	Orange Rocket Japanese Barberry	2 gal.	Pot
	3	Cornus stolonifera `Farrow`	Arctic Fire® Red Twig Dogwood	2 gal.	Pot
	2	Euonymus fortunei 'Roemertwo'	Gold Splash® Wintercreeper	2 gal.	Pot
	10	Juniperus scopulorum 'Blue Arrow'	Blue Arrow Juniper	2 gal.	Pot
	6	Lavandula angustifolia 'Munstead'	Munstead English Lavender	2 gal.	Pot
	2	Miscanthus sinensis `Morning Light`	Morning Light Eulalia Grass	2 gal.	Pot
	5	Nandina domestica 'Gulf Stream'	Gulf Stream Heavenly Bamboo	2 gal.	Pot
	7	Pennisetum alopecuroides 'Hameln'	Hameln Fountain Grass	2 gal.	Pot
	5	Physocarpus opulifolius 'SMPOTW'	Tiny Wine® Ninebark	2 gal.	Pot
	4	Pinus mugo 'Slowmound'	Slowmound Mugo Pine	2 gal.	Pot
	3	Prunus laurocerasus 'Otto Luyken'	Otto Luyken English Laurel	2 gal.	Pot
	10	Spiraea x bumalda 'Goldmound'	Gold Mound Spirea	2 gal.	Pot

SHRUB AREAS	QTY	BOTANICAL NAME	COMMON NAME	SIZE	CONTAINER	SPACING
	5,092 sf	TYPE L2 SCREEN				
	53	Arbutus unedo 'Compacta'	Compact Strawberry Tree	2 gal.	Pot	25% @ 60" o.c.
	588	Arctostaphylos uva-ursi	Kinnikinnick	4"	Pot	25% @ 18" o.c.
	53	Myrica californica	Pacific Wax Myrtle	2 gal.	Pot	25% @ 60" o.c.
	53	Ribes sanguineum	Red Flowering Currant	2 gal.	Pot	25% @ 60" o.c.
	3,380 sf	TYPE L3 SCREEN				
	38	Berberis thunbergii 'Crimson Pygmy'	Crimson Pygmy Japanese Barberry	2 gal.	Pot	17% @ 48" o.c.
	38	Hydrangea paniculata 'SMNHPH'	Little Lime Punch Hydrangea	2 gal.	Pot	17% @ 48" o.c.
	38	Ilex crenata 'Soft Touch'	Soft Touch Japanese Holly	2 gal.	Pot	17% @ 48" o.c.
	36	Pennisetum alopecuroides 'Hameln'	Hameln Fountain Grass	2 gal.	Pot	16% @ 48" o.c.
	36	Physocarpus opulifolius 'SMPOTW' TM	Tiny Wine Ninebark	2 gal.	Pot	16% @ 48" o.c.
	38	Spiraea x bumalda 'Goldmound'	Gold Mound Spirea	2 gal.	Pot	17% @ 48" o.c.
	16,009 sf	TYPE L4 LANDSCAPING				
	1,479	Arctostaphylos uva-ursi	Kinnikinnick	4"	Pot	20% @ 18" o.c.
	370	Euonymus fortunei 'Roemertwo' TM	Gold Splash Wintercreeper	2 gal.	Pot	20% @ 36" o.c.
	370	Ilex crenata 'Soft Touch'	Soft Touch Japanese Holly	2 gal.	Pot	20% @ 36" o.c.
	370	Nandina domestica 'Gulf Stream' TM	Gulf Stream Heavenly Bamboo	2 gal.	Pot	20% @ 36" o.c.
	278	Pennisetum alopecuroides 'Hameln'	Hameln Fountain Grass	2 gal.	Pot	15% @ 36" o.c.
	52	Prunus laurocerasus 'Otto Luyken'	Otto Luyken English Laurel	2 gal.	Pot	5% @ 48" o.c.
	1,408 sf	GENERAL LANDSCAPING				
	183 sf	Berberis thunbergii 'Orange Rocket'	Orange Rocket Japanese Barberry	2 gal.	Pot	
	183 sf	Calamagrostis x acutiflora 'Karl Foerster'	Karl Foerster Feather Reed Grass	2 gal.	Pot	
	169 sf	Euonymus fortunei 'Roemertwo'	Gold Splash® Wintercreeper	2 gal.	Pot	
	169 sf	Hydrangea paniculata 'SMNHPH'	Little Lime Punch® Hydrangea	2 gal.	Pot	
	169 sf	Ilex crenata 'Soft Touch'	Soft Touch Japanese Holly	2 gal.	Pot	
	183 sf	Nandina domestica 'Gulf Stream'	Gulf Stream Heavenly Bamboo	2 gal.	Pot	
	183 sf	Pennisetum alopecuroides 'Hameln'	Hameln Fountain Grass	2 gal.	Pot	
	169 sf	Spiraea x bumalda 'Goldmound'	Gold Mound Spirea	2 gal.	Pot	

GROUND COVERS	QTY	BOTANICAL NAME	COMMON NAME	SIZE	CONTAINER
	816 sf	Turf Hydroseed	Drought Tolerant Fescue Blend	seed	

SITE WORK	QTY	BOTANICAL NAME	COMMON NAME	SIZE	CONTAINER
	934 sf	Bark Mulch		---	

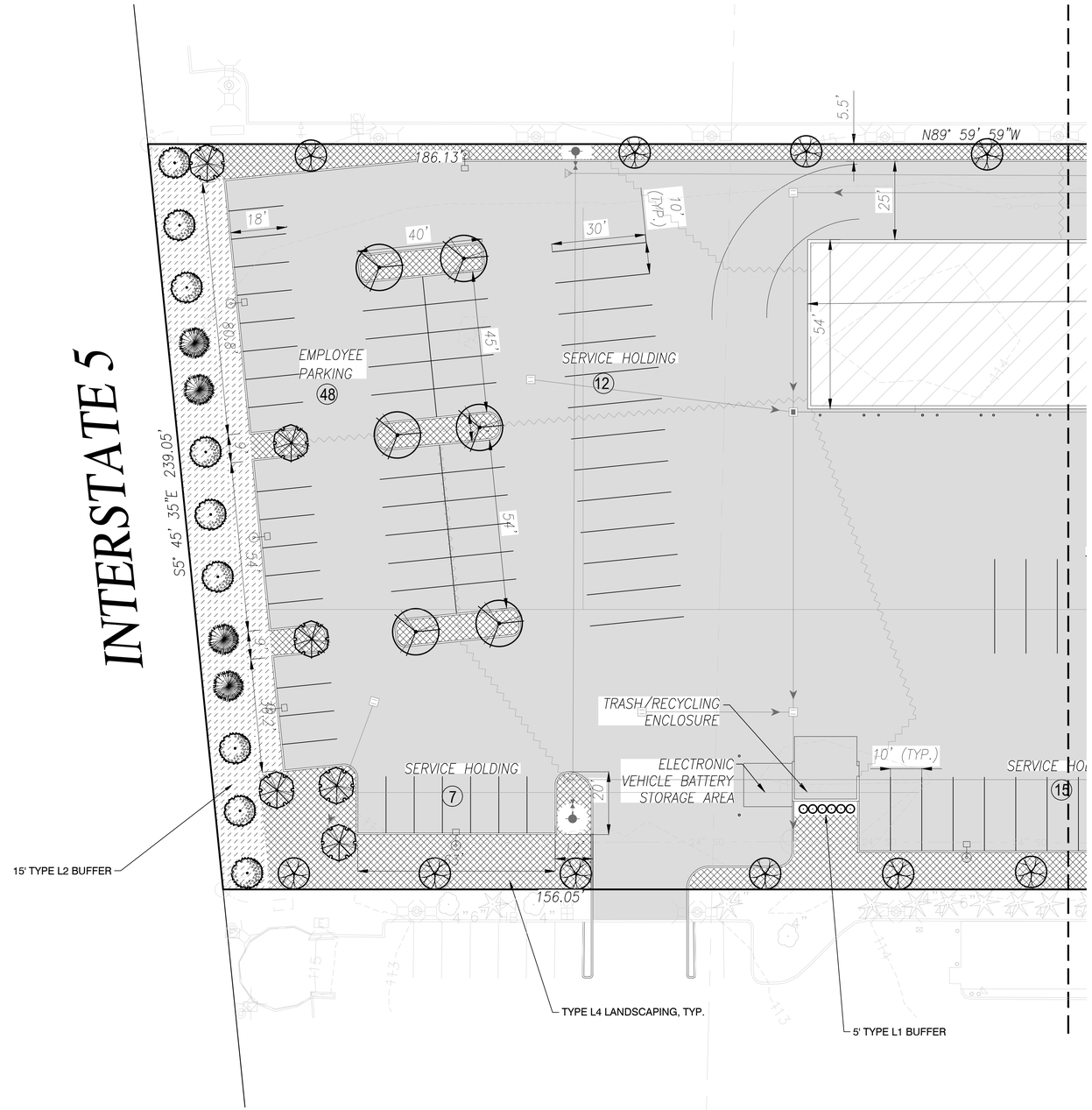

NORTH

0 30' 60'

ORIGIN
DESIGN GROUP
1031 185TH AVE NE
SNOHOMISH, WA 98290
TEL: 425.346.1905

STATE OF WASHINGTON LICENSED LANDSCAPE ARCHITECT
KRYSTAL LOWE
LICENCE NO. 1206

REVISIONS:

#	DESCRIPTION	DATE

KENDALL FORD PRO ELITE COMMERCIAL VEHICLE SERVICE CENTER
16100 SMOKEY POINT BLVD
MARYSVILLE, WA 98271
PARCEL: 31052900400600
PFN: PA-21055

DRAWING TITLE:
LANDSCAPE PLAN

APPLICANT:
KENDALL AUTO GROUP
8854 W. EMERALD ST, SUITE 260
BOISE, ID 83704
(541) 335-4585

DRAWING INFORMATION
ODG PROJECT #: 23-480
DRAWN BY: KL
CHECKED BY: KL

DATE:
OCTOBER 16, 2023

SHEET NO.
L-2
OF 4

NE 1/4, SE 1/4, SEC. 29, T. 31 N., R.05 E., W.M.
CITY OF MARYSVILLE, SNOHOMISH COUNTY, WASHINGTON

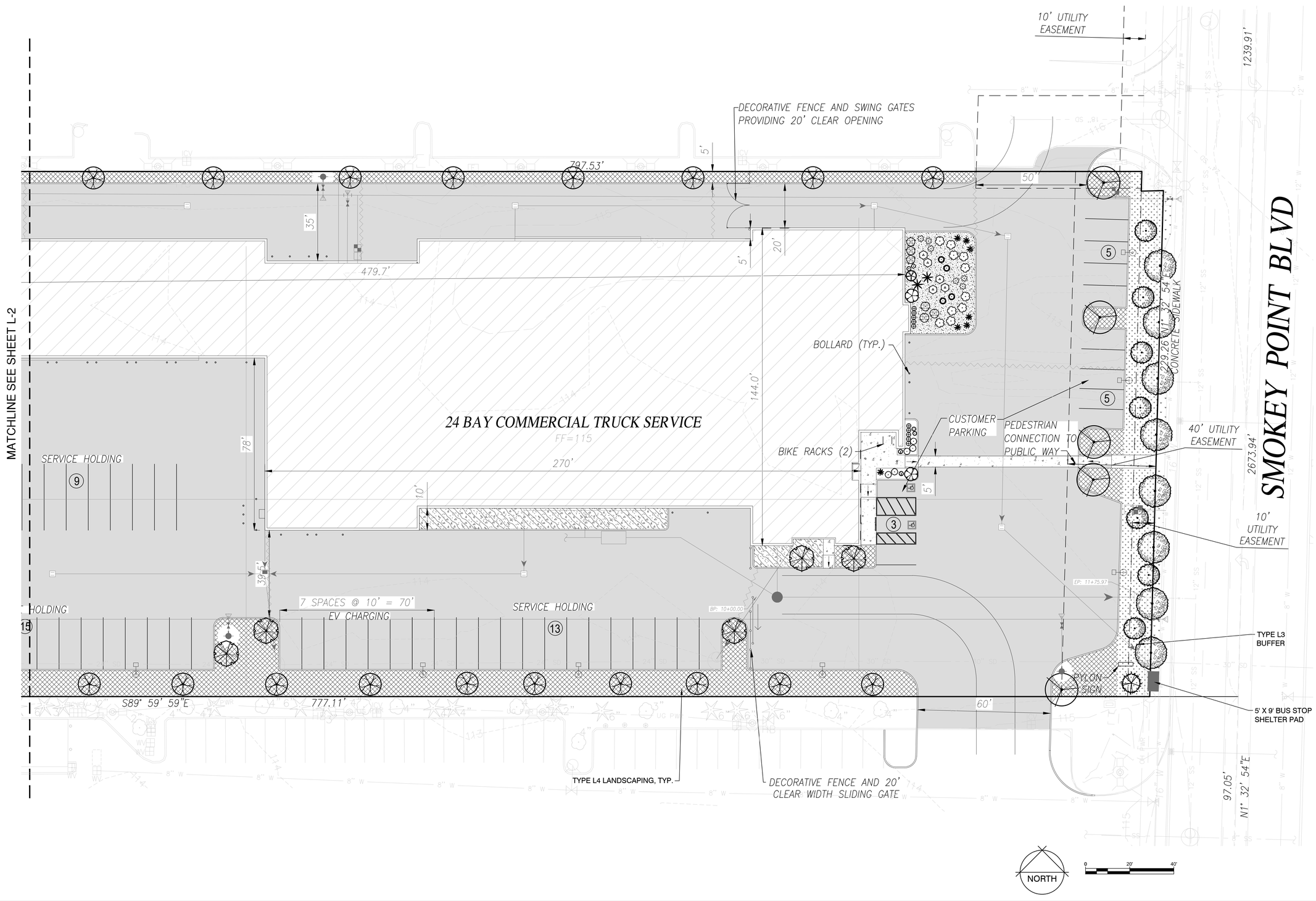

ORIGIN
DESIGN GROUP
1031 185TH AVE NE
SNOHOMISH, WA 98290
TEL: 425.346.1905

STATE OF WASHINGTON LICENSED LANDSCAPE ARCHITECT
KRYSTAL LOWE
LICENCE NO. 1206

REVISIONS:

#	DESCRIPTION	DATE

KENDALL FORD PRO ELITE COMMERCIAL VEHICLE SERVICE CENTER
16100 SMOKEY POINT BLVD
MARYSVILLE, WA 98271
PARCEL: 31052900400600
PFN: PA-21055

DRAWING TITLE:
LANDSCAPE PLAN

APPLICANT:
KENDALL AUTO GROUP
8854 W. EMERALD ST, SUITE 260
BOISE, ID 83704
(541) 335-4585

DRAWING INFORMATION
ODG PROJECT #: 23-480
DRAWN BY: KL
CHECKED BY: KL

DATE:
OCTOBER 16, 2023

SHEET NO.
L-3
OF 4

NE 1/4, SE 1/4, SEC. 29, T. 31 N., R.05 E., W.M.
CITY OF MARYSVILLE, SNOHOMISH COUNTY, WASHINGTON

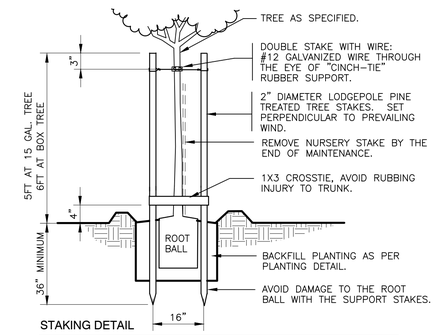

STAKING DETAIL

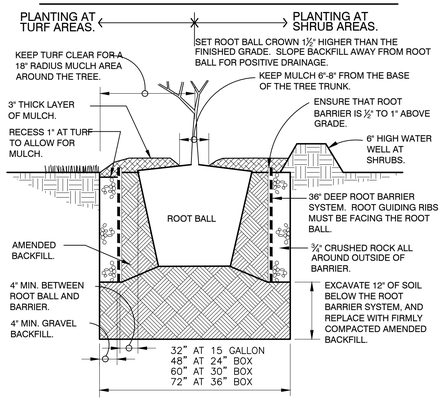

PLANT PIT DETAIL

1 ROOT BARRIER TREE PLANTING

1" = 1'-0"

FX-PL-FX-TREE-12

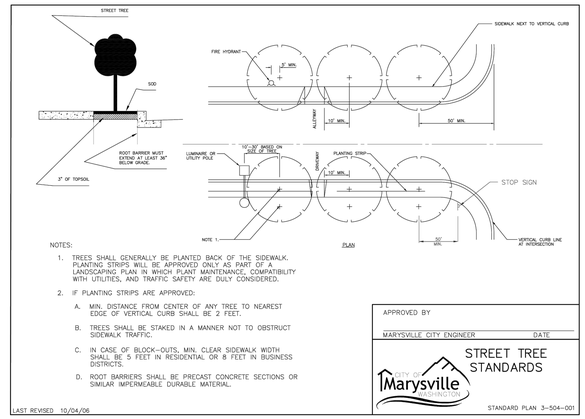

2 STREET TREE STANDARDS 3-504

329301.04-01

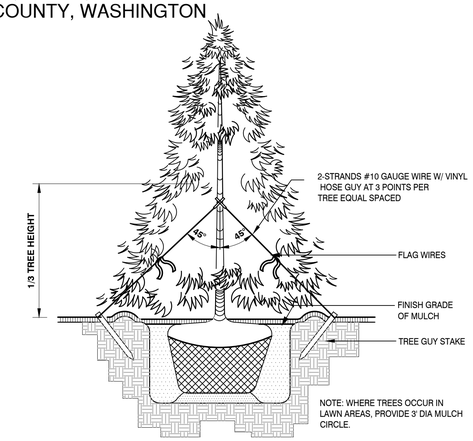

3 CONIFER TREE PLANTING & GUYING

1/2" = 1'-0"

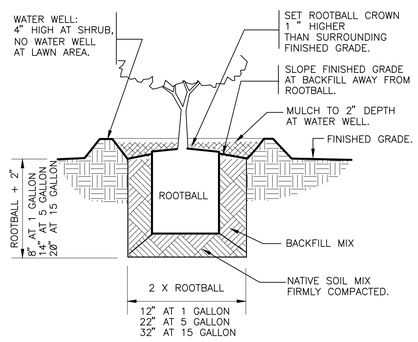

4 SHRUB PLANTING

1" = 1'-0"

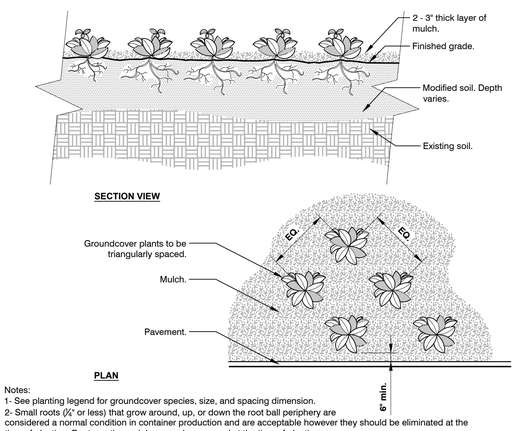

Notes:
1- See planting legend for groundcover species, size, and spacing dimension.
2- Small roots (¼" or less) that grow around, up, or down the root ball periphery are considered a normal condition in container production and are acceptable however they should be eliminated at the time of planting. Roots on the periphery can be removed at the time of planting.
3- Settle soil around root ball of each groundcover prior to mulching.

5 GROUNDCOVER

3/4" = 1'-0"

ORIGIN
DESIGN GROUP
1031 185TH AVE NE
SNOHOMISH, WA 98290
TEL: 425.346.1905

STATE OF WASHINGTON LICENSED LANDSCAPE ARCHITECT
KRYSTAL LOWE
LICENCE NO. 1206

REVISIONS:

#	DESCRIPTION	DATE

KENDALL FORD PRO ELITE COMMERCIAL VEHICLE SERVICE CENTER
16100 SMOKEY POINT BLVD
MARYSVILLE, WA 98271
PARCEL: 3105290040060 0
PFN: PA-21055

DRAWING TITLE:
LANDSCAPE PLAN

APPLICANT:

KENDALL AUTO GROUP
8854 W. EMERALD ST, SUITE 260
BOISE, ID 83704
(541) 335-4585

DRAWING INFORMATION

ODG PROJECT #: 23-480
DRAWN BY: KL
CHECKED BY: KL

DATE:
OCTOBER 16, 2023

SHEET NO:
L-4
OF 4