Strawberry Fields Turf Conversion Marysville

60% Submittal
October, 31st 2022

City of Marysville

Nick Loutsis, E.I.T Project Engineer
80 Columbia Avenue Marysville, WA 98270

Consultant Team

Robert W. Droll, Landscape Architect, PS
Recreation Facility Design
4405 7th Avenue SE, Suite #203
Lacey, WA 98503
(360) 456-3813

CEKO LLC
2255 Squak Mountain Loop SW, Issaquah, WA 98027
(425) 864-8246

GeoEngineers
554 West Bakerview Road Bellingham, WA 98226
(360) 647-1510

Larry Steel & Assocaites Inc.
1334 King Street, Suite 1 Bellingham, WA 98229
(360) 676-9350

Project Site

6100 152nd St NE, Marysville, WA 98271

Legal Description

NE1/4 SEC34 T31N R5E

Zoning and Land Use

Recreation

PARCEL NUMBER:
31053400100500

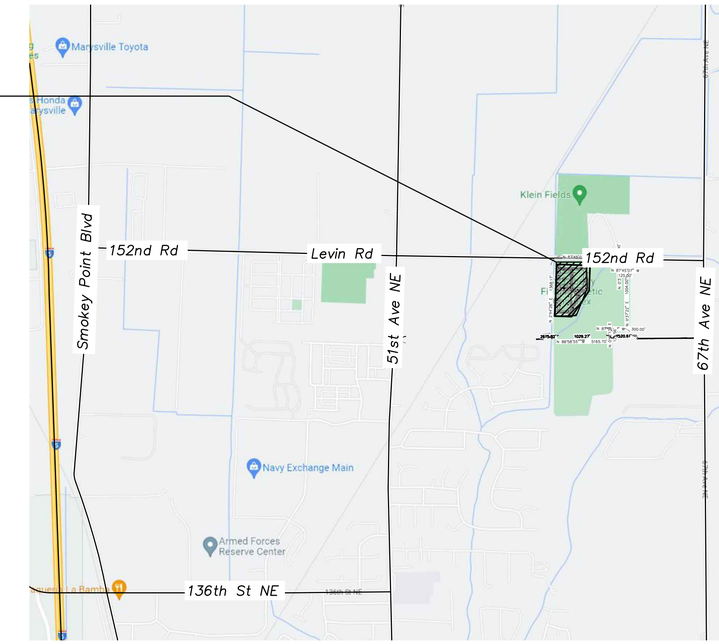

Vicinity Map

NTS

Sheet Index

G1.0	Title Sheet
G2.0	Existing Conditions
D1.0	Demolition Plan Field 2
D2.0	TESC Plan Field 2
D2.1	TESC Details
C1.0	Site Plan Field 2
C1.1	Spectator Area Site Plan Enlargement
C2.0	Grading Plan Field 2
C2.1	Spectator Area Grading Plan Enlargement
C3.0	Drainage Plan Field 2
C3.1	Drainage Details
C4.0	Irrigation Modification Plan Field 2
C5.0	Site Details
C5.1	Site Details
C5.2	Site Details
L1.0	Restoration Plan Field 2

General Notes

1. TRAFFIC CONTROL SHALL BE SOLELY THE CONTRACTOR'S RESPONSIBILITY.
2. PROVIDE A THOROUGH DAILY CLEAN UP OF THE PROJECT SITE. REMOVE ALL TRASH AND DEBRIS, CLEAN PAVEMENT(S), AND CLEAN ALL INGRESS AND EGRESS POINTS, AND RIGHTS-OF-WAY.
3. PROTECT ALL EXISTING IMPROVEMENTS FROM DAMAGE AND DEFACEMENT.
4. VERIFY ALL DIMENSIONS BEFORE PROCEEDING. ANY DIMENSIONAL DEVIATION FROM THAT SHOWN WHICH MAY AFFECT INTENT OR DESIGN SHALL BE BROUGHT TO THE ATTENTION OF THE PROJECT ENGINEER. OBTAIN WRITTEN RESOLUTION PRIOR TO PROCEEDING WITH ANY WORK.
5. PROJECT ENGINEER SHALL BE IMMEDIATELY NOTIFIED DISCREPANCIES BETWEEN DRAWINGS AND SITE CONDITIONS.

Abbreviations

ABN	ABANDON
AC	ASPHALTIC CONCRETE
ADD	ADDITIVE
ALT	ALTERNATE
ALUM	ALUMINUM
APPROX	APPROXIMATELY
A.T.	ALL-THREAD
@	AT
BC	BOTTOM OF CURB
BLKG	BLOCKING
BM	BENCH MARK
BOC	BACK OF CURB
BW	BOTTOM OF WALL
CB	CARRIAGE BOLT
CB	CATCH BASIN
CF	CUBIC FOOT
CIE	COLLECTOR INVERT ELEVATION
CJ	CONTROL JOINT
CLR	CLEARING, CLEARANCE
CMP	CORRUGATED METAL PIPE
CO	CLEANOUT
CONT	CONTINUOUS
CONC	CONCRETE
CORR	CORRUGATED
CP	CENTER POINT
CS	COUNTERSINK
CSBC	CRUSHED SURFACING BASE COURSE
CSTC	CRUSHED SURFACING TOP COURSE
CY	CUBIC YARD
DEMO	DEMOLISH
DET	DETAIL
DIA	DIAMETER
DTL	DETAIL
DWG	DRAWING
E	EAST
EA	EACH
EJ	EXPANSION JOINT
EL, ELEV	ELEVATION
ELEC	ELECTRICAL
EOP	EDGE OF PAVEMENT
EQ	EQUAL
EQ SP	EQUAL SPACING
EX, EXIST	EXISTING
FDN	FOUNDATION
FFE	FINISH FLOOR ELEVATION
FIN GR	FINISH GRADE
FT	FOOT, FEET
FTG	FOOTING
GA	GAUGE
GAL	GALLON
GALV	GALVANIZED
GPM	GALLONS PER MINUTE
GW	SANDY GRAVEL
HL	HELICAL
HMA	HOT MIX ASPHALT
HP	HIGH POINT
HT	HEIGHT
HZ	HORIZONTAL
ID	INSIDE DIAMETER
I.E.	INVERT ELEVATION
IN	INCH
IRR	IRRIGATION
JT	JOINT
L	LEFT, LONG
LB	LAG BOLT
LF	LINEAL FOOT/FEET
LP	LOW POINT
LS	LAG SCREW
MB	MACHINE BOLT
MAT'L	MATERIAL
MAX	MAXIMUM
MIL	1/1000th INCH
MIN	MINIMUM
MPOC	MID-POINT OF CURVE
N	NORTH
NIC	NOT IN CONTRACT
NO.	NUMBER
NOM	NOMINAL
NTS	NOT TO SCALE
OC	ON CENTER
OD	OUTSIDE DIAMETER
OR	OWNER'S REPRESENTATIVE
PC	POINT OF CURVATURE
PCC	PORTLAND CEMENT CONCRETE
P.E.	PROFESSIONAL ENGINEER
PERF	PERFORATED
PERIM	PERIMETER
PI	POINT OF INTERSECTION
PLT	PLATE
PLYWD	PLYWOOD
POLY	POLYETHYLENE
PRO	PROPOSED
PSE	PUGET SOUND ENERGY
PSI	POUNDS PER SQUARE INCH
PT	POINT OF TANGENCY
PT	PRESSURE TREATED
PVC	POLYVINYL CHLORIDE
PVC	POINT OF VERTICAL CURVATURE
PVI	POINT OF VERTICAL INTERSECTION
PVMT	PAVEMENT
PVT	POINT OF VERTICAL TANGENCY
R	RADIUS
REQ'D	REQUIRED
RP	RADIUS POINT
S	SLOPE (FT/FT)
S	SOUTH
SCH	SCHEDULE
SEC	SECTION
SF	SQUARE FEET
SHLDR	SHOULDER
SIM	SIMILAR
SJ	SCORE JOINT
SM	SILTY SAND
SP'D	SPACED
SQ	SQUARE
SS	SANITARY SEWER
STD	STANDARD
STA	STATION
STL	STEEL
SY	SQUARE YARD
TC	TOP OF CURB
THK	THICK
T.O.S.	TOP OF SLAB
TW	TOP OF WALL
TYP	TYPICAL
UNO	UNLESS NOTED OTHERWISE
VC	VERTICAL CURVE
VERT	VERTICAL
W/	WITH
W/IN	WITHIN
W/O	WITHOUT
WD	WIDTH
WSDOT	WASHINGTON STATE DEPARTMENT OF TRANSPORTATION
WWM	WELDED WIRE MESH

811 Call 811 two business days before you dig

CAUTION!!! OVERHEAD AND UNDERGROUND UTILITIES

THE CONTRACTOR SHALL BE FULLY RESPONSIBLE FOR THE LOCATION AND PROTECTION OF ALL EXISTING UTILITIES. THE CONTRACTOR SHALL VERIFY ALL UTILITY LOCATIONS PRIOR TO CONSTRUCTION BY CALLING THE UNDERGROUND LOCATE LINE AT 1-800-424-5555 A MINIMUM OF 48 HOURS PRIOR TO ANY EXCAVATION.

G1.0

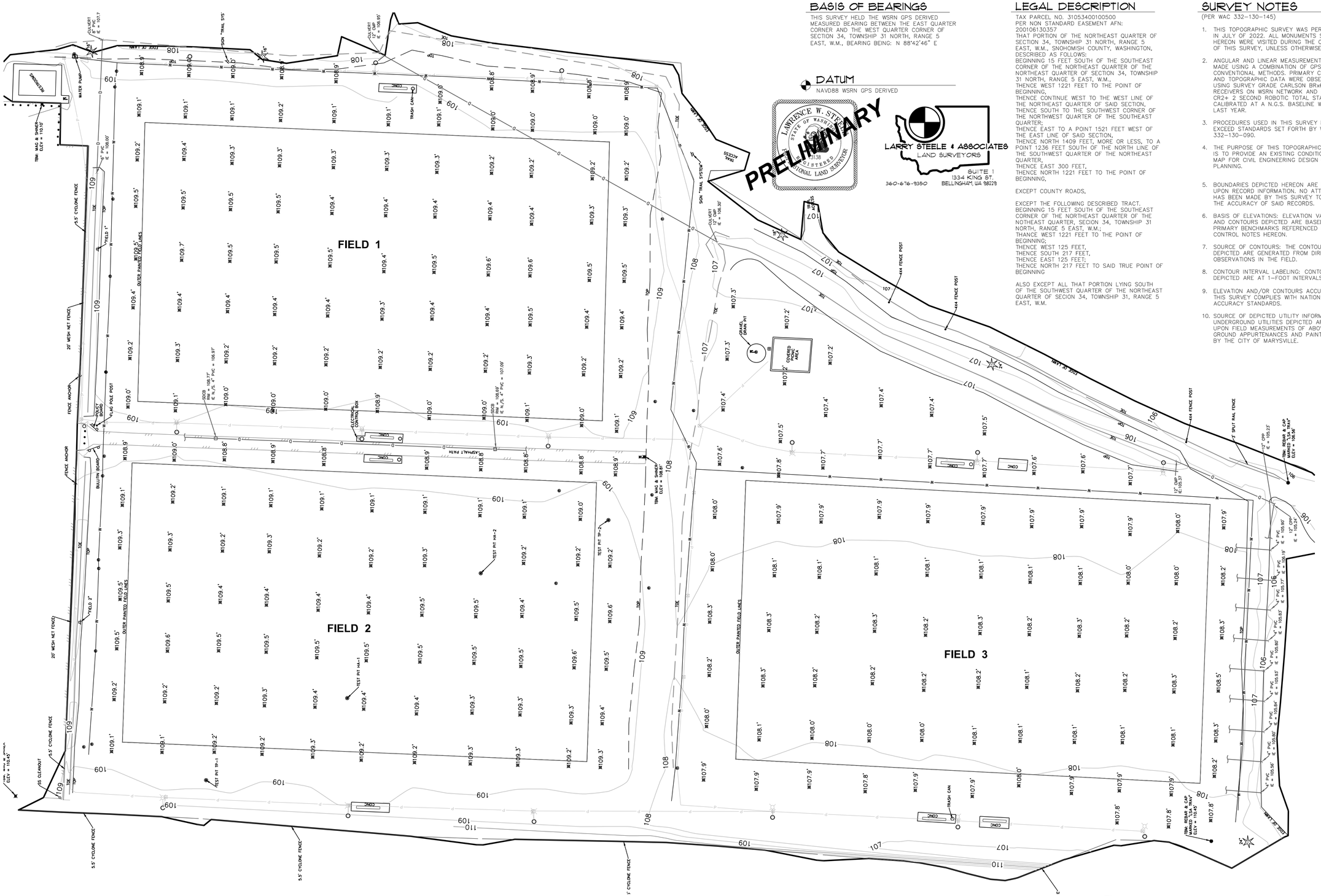

BASIS OF BEARINGS

THIS SURVEY HELD THE WSRN GPS DERIVED MEASURED BEARING BETWEEN THE EAST QUARTER CORNER AND THE WEST QUARTER CORNER OF SECTION 34, TOWNSHIP 31 NORTH, RANGE 5 EAST, W.M., BEARING BEING: N 88°42'46" E

DATUM

NAVD88 WSRN GPS DERIVED

LEGAL DESCRIPTION

TAX PARCEL NO. 310534001005 00
PER NON STANDARD EASEMENT AFN:
200106130357
THAT PORTION OF THE NORTHEAST QUARTER OF SECTION 34, TOWNSHIP 31 NORTH, RANGE 5 EAST, W.M., SNOHOMISH COUNTY, WASHINGTON, DESCRIBED AS FOLLOWS:
BEGINNING 15 FEET SOUTH OF THE SOUTHEAST CORNER OF THE NORTHEAST QUARTER OF THE NORTHEAST QUARTER OF SECTION 34, TOWNSHIP 31 NORTH, RANGE 5 EAST, W.M.,
THENCE WEST 1221 FEET TO THE POINT OF BEGINNING,
THENCE CONTINUE WEST TO THE WEST LINE OF THE NORTHEAST QUARTER OF SAID SECTION,
THENCE SOUTH TO THE SOUTHWEST CORNER OF THE NORTHWEST QUARTER OF THE SOUTHEAST QUARTER;
THENCE EAST TO A POINT 1521 FEET WEST OF THE EAST LINE OF SAID SECTION,
THENCE NORTH 1409 FEET, MORE OR LESS, TO A POINT 1236 FEET SOUTH OF THE NORTH LINE OF THE SOUTHWEST QUARTER OF THE NORTHEAST QUARTER,
THENCE EAST 300 FEET,
THENCE NORTH 1221 FEET TO THE POINT OF BEGINNING,

EXCEPT COUNTY ROADS,

EXCEPT THE FOLLOWING DESCRIBED TRACT.
BEGINNING 15 FEET SOUTH OF THE SOUTHEAST CORNER OF THE NORTHEAST QUARTER OF THE NOTHEAST QUARTER, SECION 34, TOWNSHIP 31 NORTH, RANGE 5 EAST, W.M.;
THANCE WEST 1221 FEET TO THE POINT OF BEGINNING;
THENCE WEST 125 FEET,
THENCE SOUTH 217 FEET,
THENCE EAST 125 FEET;
THENCE NORTH 217 FEET TO SAID TRUE POINT OF BEGINNING

ALSO EXCEPT ALL THAT PORTION LYING SOUTH OF THE SOUTHWEST QUARTER OF THE NORTHEAST QUARTER OF SECION 34, TOWNSHIP 31, RANGE 5 EAST, W.M.

SURVEY NOTES

(PER WAC 332-130-145)

1. THIS TOPOGRAPHIC SURVEY WAS PERFORMED IN JULY OF 2022. ALL MONUMENTS SHOWN HEREON WERE VISITED DURING THE COURSE OF THIS SURVEY, UNLESS OTHERWISE NOTED.
2. ANGULAR AND LINEAR MEASUREMENTS WERE MADE USING A COMBINATION OF GPS AND CONVENTIONAL METHODS. PRIMARY CONTROL AND TOPOGRAPHIC DATA WERE OBSERVED USING SURVEY GRADE CARLSON BR×6+ GPS RECEIVERS ON WSRN NETWORK AND GEOMAX CR2+ 2 SECOND ROBOTIC TOTAL STATION CALIBRATED AT A N.G.S. BASELINE WITHIN THE LAST YEAR.
3. PROCEDURES USED IN THIS SURVEY MEET OR EXCEED STANDARDS SET FORTH BY WAC 332-130-090.
4. THE PURPOSE OF THIS TOPOGRAPHIC SURVEY IS TO PROVIDE AN EXISTING CONDITIONS BASE MAP FOR CIVIL ENGINEERING DESIGN OR PLANNING.
5. BOUNDARIES DEPICTED HEREON ARE BASED UPON RECORD INFORMATION. NO ATTEMPT HAS BEEN MADE BY THIS SURVEY TO VERIFY THE ACCURACY OF SAID RECORDS.
6. BASIS OF ELEVATIONS: ELEVATION VALUES AND CONTOURS DEPICTED ARE BASED UPON PRIMARY BENCHMARKS REFERENCED IN CONTROL NOTES HEREON.
7. SOURCE OF CONTOURS: THE CONTOURS DEPICTED ARE GENERATED FROM DIRECT OBSERVATIONS IN THE FIELD.
8. CONTOUR INTERVAL LABELING: CONTOURS DEPICTED ARE AT 1-FOOT INTERVALS.
9. ELEVATION AND/OR CONTOURS ACCURACY: THIS SURVEY COMPLIES WITH NATIONAL MAP ACCURACY STANDARDS.
10. SOURCE OF DEPICTED UTILITY INFORMATION: UNDERGROUND UTILITIES DEPICTED ARE BASED UPON FIELD MEASUREMENTS OF ABOVE GROUND APPURTENANCES AND PAINT MARKS BY THE CITY OF MARYSVILLE.

Strawberry Field Turf Conversion

City of Marysville
Washington

RWD
Landscape Architects
4405 7th Ave. SE, Suite 203
Lacey, WA 98503
360.456.3813
bob@rwdroll.com

PROJECT NO. 22015
DRAWING
DESIGNED BY BD
DRAWN BY JH
CHECKED BY BD

REVISION

DATE	CHANGE

DATE: 0000 00, 0000

60% SUBMITTAL

EXISTING CONDITIONS

Sheet G2.0

O:\2022\22015 Strawberry Fields Conversion Marysville\Drawings\Sheets\G2.0 - Existing Conditions.dwg
Oct-31-22 2:20pm

DEMOLITION LEGEND

- FRAISE MOW FIELD 2" AND DISPOSE OFF SITE. (76,230 ± SF)
- CLEAR AND GRUB ALL VEGETATION AND DISPOSE OFF SITE (15,310 ± SF)
- DEMOLISH EXISTING CONCRETE SURFACING AND DISPOSE OFF SITE. (260 ± SF)
- SAWCUT EXISTING HMA PAVEMENT AND DISPOSE OFF SITE. (410 ± SF)
- EDGE CUT EXISTING TURF

DEMOLITION NOTES

1. EXISTING SUBSURFACE DRAINAGE TO BE ABANDONED IN PLACE
2. EXISTING FIELD 2 IRRIGATION HEADS TO BE REMOVED AND DISPOSED OF OFF SITE, IRRIGATION LATERALS TO BE CAPPED AND ABANDONED IN PLACE
3. SALVAGE FIELD 2 CONTROL VALVES AND RETURN TO OWNER. CUT AND CAP NIPPLE CONNECTING VALVE TO THE MAINLINE
4. EXISTING MAINLINE TO REMAIN, PRESERVE IN PLACE.
5. EXISTING ELECTRICAL LINES TO REMAIN.
6. EXISTING FIELD LIGHTS AND POWER JUNCTION BOXES TO REMAIN.
7. QUANTITIES PROVIDED FOR CONTRACTOR INFORMATION ONLY. CONTRACTOR TO DERIVE THEIR OWN QUANTITIES.
8. ANY DAMAGE SHALL BE REPAIRED IMMEDIATELY
9. IF EXISTING SUBSURFACE DRAINAGE PIPES OR EXISTING IRRIGATION LATERAL LINES EXTENDS INTO THE AGGREGATE BASE COURSE, CUT PIPE SIX (6) INCHES BELOW SUBGRADE, AND DISPOSE WASTE OFF SITE.
10. IRRIGATION SYSTEMS OF FIELD 1 AND FIELD 3 TO BE PRESERVED.
11. EDGE CUT EXISTING TURF AT EDGE OF DEMOLITION BOUNDARIES TO HAVE A CLEAN AND UNIFORM EDGE FOR SOD INSTALLATION.

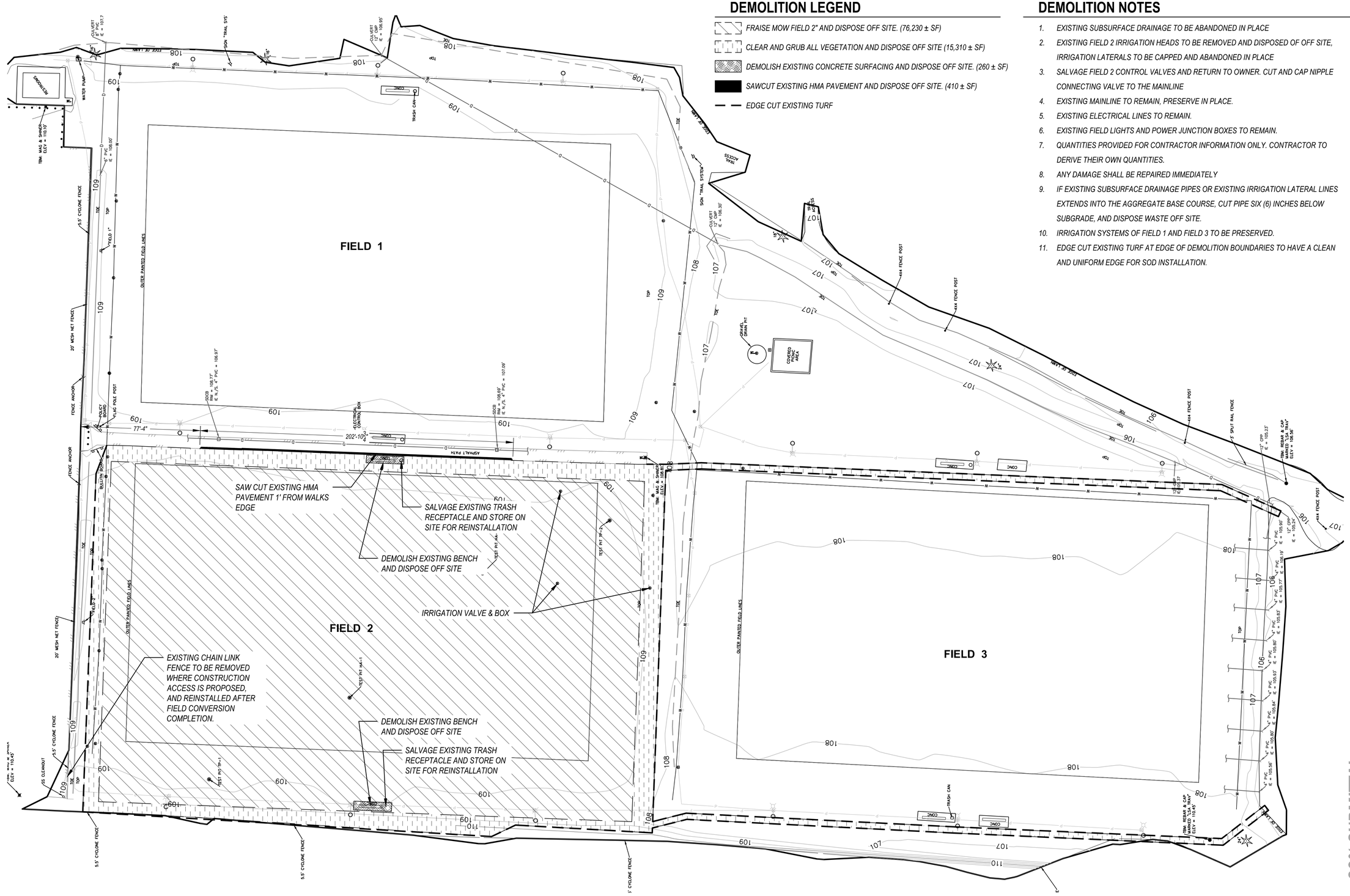

Strawberry Field Turf Conversion

City of Marysville
Washington

RWD
Landscape Architects
4405 7th Ave. SE, Suite 203
Lacey, WA 98503
360.456.3813
bob@rwdroll.com

PROJECT NO. 22015
DRAWING
DESIGNED BY BD
DRAWN BY JH
CHECKED BY BD

REVISION

DATE	CHANGE

DATE: 0000 00, 0000

60% SUBMITTAL

DEMOLITION PLAN FIELD 2

Sheet D1.0

O:\2022\22015 Strawberry Fields Conversion Marysville\Drawings\Sheets\FIELD 2- DEMOLITION PLAN.dwg
Oct-31-22 2:13pm

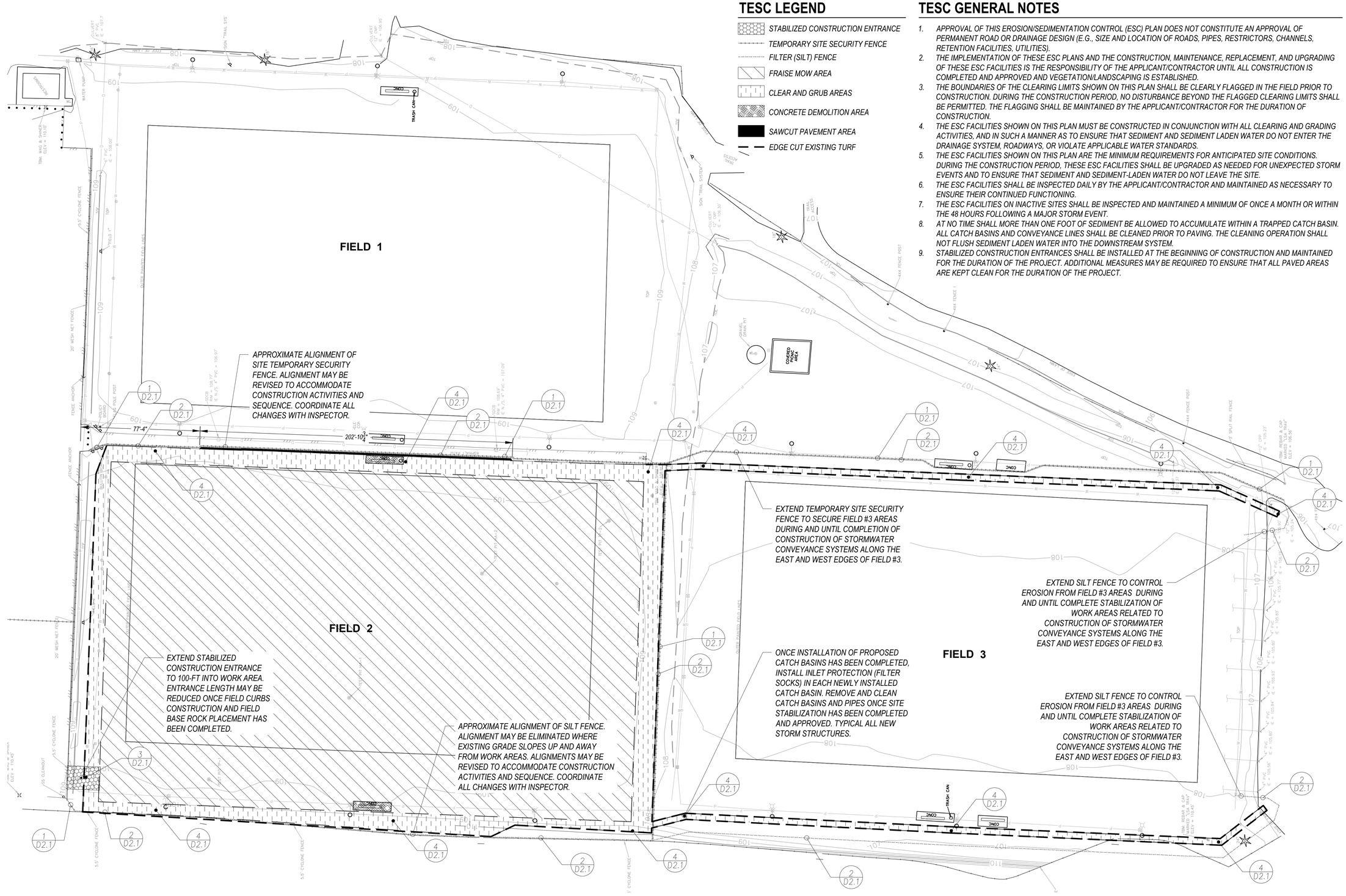

TESC LEGEND

- STABILIZED CONSTRUCTION ENTRANCE
- TEMPORARY SITE SECURITY FENCE
- FILTER (SILT) FENCE
- FRAISE MOW AREA
- CLEAR AND GRUB AREAS
- CONCRETE DEMOLITION AREA
- SAWCUT PAVEMENT AREA
- EDGE CUT EXISTING TURF

TESC GENERAL NOTES

1. APPROVAL OF THIS EROSION/SEDIMENTATION CONTROL (ESC) PLAN DOES NOT CONSTITUTE AN APPROVAL OF PERMANENT ROAD OR DRAINAGE DESIGN (E.G., SIZE AND LOCATION OF ROADS, PIPES, RESTRICTORS, CHANNELS, RETENTION FACILITIES, UTILITIES).
2. THE IMPLEMENTATION OF THESE ESC PLANS AND THE CONSTRUCTION, MAINTENANCE, REPLACEMENT, AND UPGRADING OF THESE ESC FACILITIES IS THE RESPONSIBILITY OF THE APPLICANT/CONTRACTOR UNTIL ALL CONSTRUCTION IS COMPLETED AND APPROVED AND VEGETATION/LANDSCAPING IS ESTABLISHED.
3. THE BOUNDARIES OF THE CLEARING LIMITS SHOWN ON THIS PLAN SHALL BE CLEARLY FLAGGED IN THE FIELD PRIOR TO CONSTRUCTION. DURING THE CONSTRUCTION PERIOD, NO DISTURBANCE BEYOND THE FLAGGED CLEARING LIMITS SHALL BE PERMITTED. THE FLAGGING SHALL BE MAINTAINED BY THE APPLICANT/CONTRACTOR FOR THE DURATION OF CONSTRUCTION.
4. THE ESC FACILITIES SHOWN ON THIS PLAN MUST BE CONSTRUCTED IN CONJUNCTION WITH ALL CLEARING AND GRADING ACTIVITIES, AND IN SUCH A MANNER AS TO ENSURE THAT SEDIMENT AND SEDIMENT LADEN WATER DO NOT ENTER THE DRAINAGE SYSTEM, ROADWAYS, OR VIOLATE APPLICABLE WATER STANDARDS.
5. THE ESC FACILITIES SHOWN ON THIS PLAN ARE THE MINIMUM REQUIREMENTS FOR ANTICIPATED SITE CONDITIONS. DURING THE CONSTRUCTION PERIOD, THESE ESC FACILITIES SHALL BE UPGRADED AS NEEDED FOR UNEXPECTED STORM EVENTS AND TO ENSURE THAT SEDIMENT AND SEDIMENT-LADEN WATER DO NOT LEAVE THE SITE.
6. THE ESC FACILITIES SHALL BE INSPECTED DAILY BY THE APPLICANT/CONTRACTOR AND MAINTAINED AS NECESSARY TO ENSURE THEIR CONTINUED FUNCTIONING.
7. THE ESC FACILITIES ON INACTIVE SITES SHALL BE INSPECTED AND MAINTAINED A MINIMUM OF ONCE A MONTH OR WITHIN THE 48 HOURS FOLLOWING A MAJOR STORM EVENT.
8. AT NO TIME SHALL MORE THAN ONE FOOT OF SEDIMENT BE ALLOWED TO ACCUMULATE WITHIN A TRAPPED CATCH BASIN. ALL CATCH BASINS AND CONVEYANCE LINES SHALL BE CLEANED PRIOR TO PAVING. THE CLEANING OPERATION SHALL NOT FLUSH SEDIMENT LADEN WATER INTO THE DOWNSTREAM SYSTEM.
9. STABILIZED CONSTRUCTION ENTRANCES SHALL BE INSTALLED AT THE BEGINNING OF CONSTRUCTION AND MAINTAINED FOR THE DURATION OF THE PROJECT. ADDITIONAL MEASURES MAY BE REQUIRED TO ENSURE THAT ALL PAVED AREAS ARE KEPT CLEAN FOR THE DURATION OF THE PROJECT.

Strawberry Field Turf Conversion

City of Marysville
Washington

CEKO Civil Engineering
2255 Squak Mountain Loop SW
Issaquah, WA 98027
425.864.8246
cpkovac@cekonw.com

CHRISTOPHER P. KOVAC, STATE OF WASHINGTON, 47598, REGISTERED PROFESSIONAL ENGINEER
October 31, 2022

PROJECT NO. 22007.01
DRAWING
DESIGNED BY CK
DRAWN BY CK
CHECKED BY CK

REVISION

DATE	CHANGE

DATE: October 31, 2022

SUBMITTAL 60%

TESC PLAN FIELD 2

Sheet D2.0

C:\CEKO\Projects\Active\22007.01-Strawberry-Fields\ACAD22007\dwg\FIELD 2- TESC PLAN.dwg
Oct-26-22 4:10pm

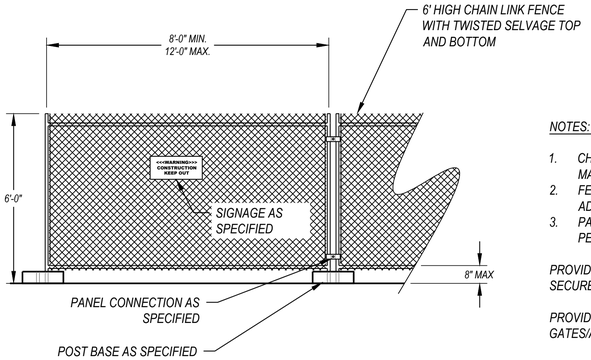

NOTES: INSTALLATION - NON-SLOPED AREAS:

1. CHAIN LINK FABRIC TO BE MIN. 11 GAUGE, GALVANIZED. NO RUSTED OR EXCESSIVELY MALFORMED FABRIC.
2. FENCE BASES SHALL BE CONCRETE AND OF SUFFICIENT WEIGHT AND/OR SPREAD TO ADEQUATELY SUPPORT EACH PANEL.
3. PANEL-TO-PANEL CONNECTIONS SHALL BE MADE AT A MINIMUM OF TWO LOCATIONS PER CONNECTION UNLESS OTHERWISE APPROVE

PROVIDE OWNER WITH SHOP DRAWINGS DESCRIBING MATERIALS & METHODS FOR SECURE, PLUMB INSTALLATIONS ON SLOPED AREAS.

PROVIDE OWNER WITH SHOP DRAWINGS DESCRIBING MATERIALS & METHODS FOR GATES/ACCESS POINTS INSTALLATIONS.

1 / D2.1 Temporary Security Fencing

SCALE: 1" = 1'-0"

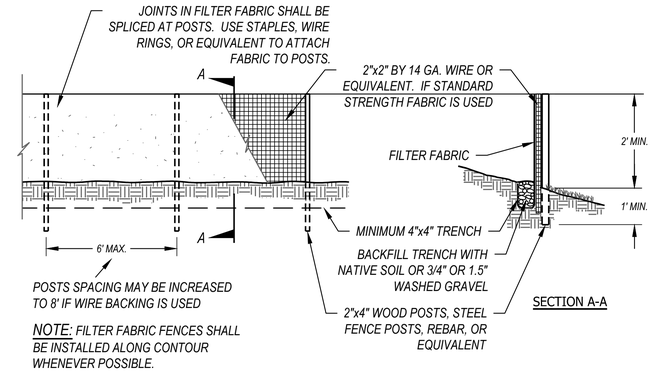

NOTE: FILTER FABRIC FENCES SHALL BE INSTALLED ALONG CONTOUR WHENEVER POSSIBLE.

2 / D2.1 Silt Fence

SCALE: NOT TO SCALE

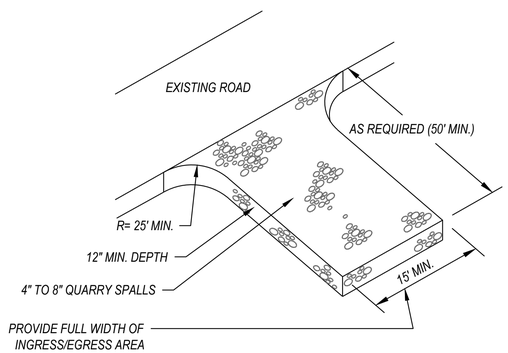

MAINTENANCE STANDARDS NOTES:

1. CONTRACTOR IS RESPONSIBLE FOR MAINTAINING AND CLEANING THE APPROACH ON A REGULAR BASIS.
2. CONTRACTOR IS RESPONSIBLE FOR PROVIDING ADDITIONAL QUARRY SPALLS AS REQUIRED TO MAINTAIN PROPER FUNCTIONING OF THE ENTRANCE AS CONSTRUCTION PROGRESSES.
3. IF THE ENTRANCE IS NOT PREVENTING SEDIMENT FROM BEING TRACKED ONTO PAVEMENT, THEN ALTERNATIVE MEASURES TO KEEP THE STREETS FREE OF SEDIMENT SHALL BE USED. THIS MAY INCLUDE STREET SWEEPING, AN INCREASE IN THE DIMENSIONS OF THE ENTRANCE, OR THE INSTALLATION OF A WHEEL WASH. IF WASHING IS USED, IT SHALL BE DONE ON AN AREA COVERED WITH CRUSHED ROCK, AND WASH WATER SHALL DRAIN TO A SEDIMENT TRAP OR POND.
4. ANY SEDIMENT THAT IS TRACKED ONTO PAVEMENT SHALL BE REMOVED IMMEDIATELY BY SWEEPING. THE PAVEMENT SHALL NOT BE CLEANED BY WASHING DOWN THE STREET, EXCEPT WHEN SWEEPING IS INEFFECTIVE AND THERE IS A THREAT TO PUBLIC SAFETY. IF IT IS NECESSARY TO WASH THE STREETS, THE CONSTRUCTION OF A SMALL SUMP SHALL BE CONSIDERED. THE SEDIMENT WOULD THEN BE WASHED INTO THE SUMP.
5. ANY QUARRY SPALLS THAT ARE LOOSENED FROM THE PAD AND END UP ON THE ROADWAY SHALL BE REMOVED IMMEDIATELY.
6. IF VEHICLES ARE ENTERING OR EXITING THE SITE AT POINTS OTHER THAN THE CONSTRUCTION ENTRANCE, FENCING SHALL BE INSTALLED TO CONTROL TRAFFIC.
7. CONTRACTOR SHALL REMOVE STABILIZED CONSTRUCTION ENTRANCE.

3 / D2.1 Stabilized Construction Entrance

SCALE: 1" = 1'-0"

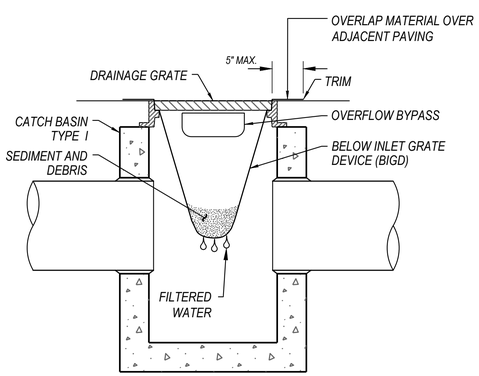

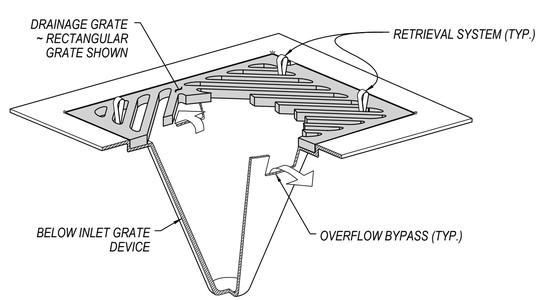

INLET PROTECTION NOTE:

CONTRACTOR SHALL CLEAN-OUT ALL SEDIMENT AND DEBRIS UPON FINAL COMPLETION AND LEAVE THE INLET PROTECTION DEVICE IN PLACE.

INSTALLATION NOTES:

1. SIZE THE BELOW INLET GRATE DEVICE (BIGD) FOR THE STORM WATER STRUCTURE IT WILL SERVICE.
2. THE BIGD SHALL HAVE A BUILT-IN HIGH-FLOW RELIEF SYSTEM (OVERFLOW BYPASS).
3. THE RETRIEVAL SYSTEM MUST ALLOW REMOVAL OF THE BIGD WITHOUT SPILLING THE COLLECTED MATERIAL.
4. PERFORM MAINTENANCE IN ACCORDANCE WITH WSDOT STANDARD SPECIFICATION 8-01.3(15).

4 / D2.1 Catch Basin Inlet Protection

SCALE: 1" = 1'-0"

Strawberry Field Turf Conversion

City of Marysville
Washington

CEKO
Civil Engineering
2255 Squak Mountain Loop SW
Issaquah, WA 98027
425.864.8246
cpkovac@cekonw.com

CHRISTOPHER P. KOVAC
STATE OF WASHINGTON
REGISTERED
PROFESSIONAL ENGINEER
October 31, 2022

PROJECT NO. 22007.01
DRAWING
DESIGNED BY CK
DRAWN BY CK
CHECKED BY CK

REVISION

DATE	CHANGE

DATE: October 31, 2022

SUBMITTAL 60%

TESC DETAILS

Sheet D2.1

Call 811 two business days before you dig

C:\CEKO\Projects\Active\22007.01-Strawberry-Fields\ACAD22007\dwg\FIELD 2- TESC PLAN.dwg
Oct-26-22 4:11pm

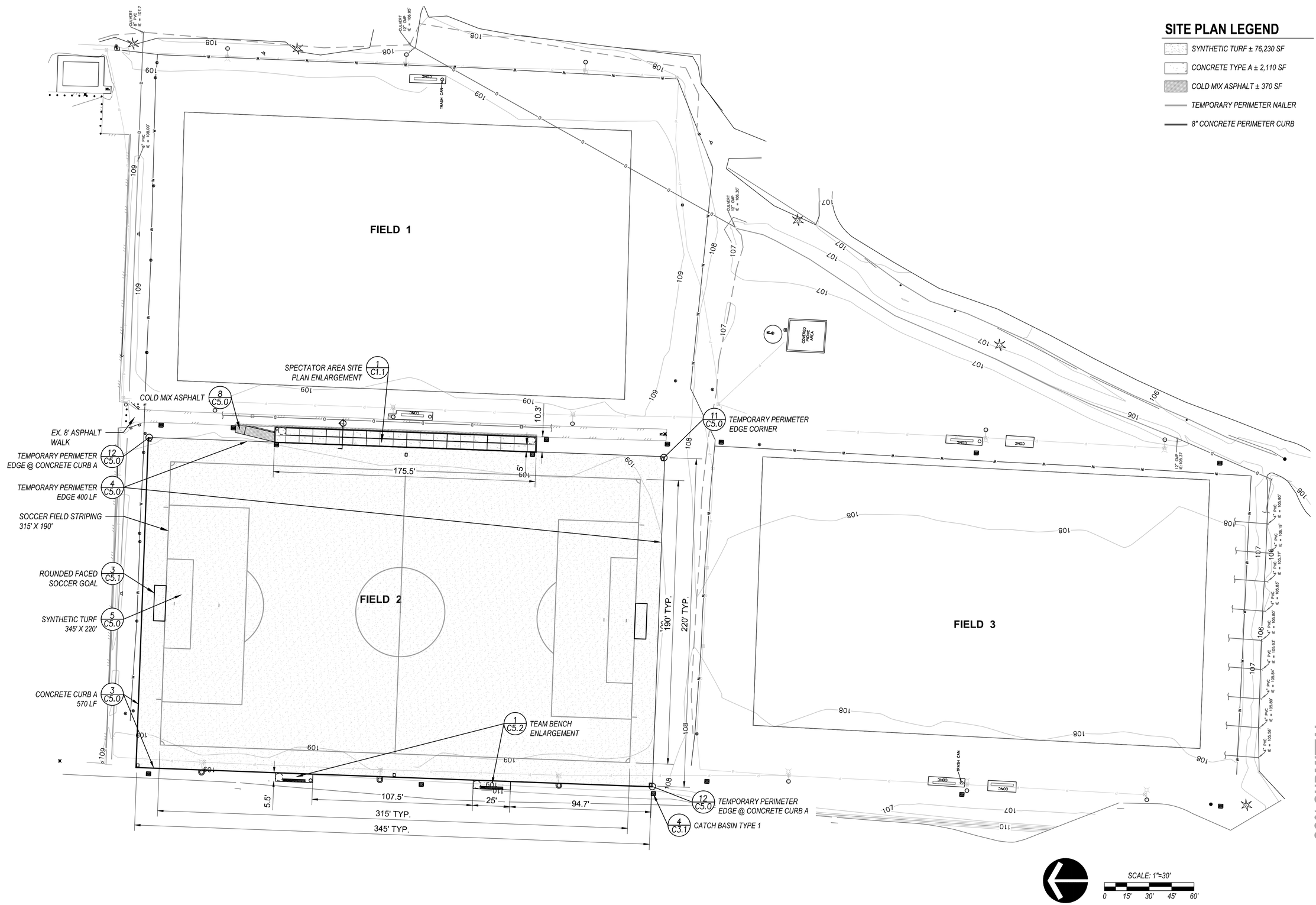

SITE PLAN LEGEND

- SYNTHETIC TURF ± 76,230 SF
- CONCRETE TYPE A ± 2,110 SF
- COLD MIX ASPHALT ± 370 SF
- TEMPORARY PERIMETER NAILER
- 8" CONCRETE PERIMETER CURB

Strawberry Field Turf Conversion

City of Marysville
Washington

RWD
Landscape Architects
4405 7th Ave. SE, Suite 203
Lacey, WA 98503
360.456.3813
bob@rwdroll.com

PROJECT NO. 22015
DRAWING
DESIGNED BY BD
DRAWN BY JH
CHECKED BY BD

REVISION

DATE	CHANGE

DATE: 0000 00, 0000

60% SUBMITTAL

SITE PLAN FIELD 2

Sheet C1.0

O:\2022\22015 Strawberry Fields Conversion Marysville\Drawings\Sheets\FIELD 2- SITE PLAN.dwg
Oct-31-22 2:18pm

SITE PLAN LEGEND

- SYNTHETIC TURF
- CONCRETE TYPE A
- COLD MIX ASPHALT PATCH

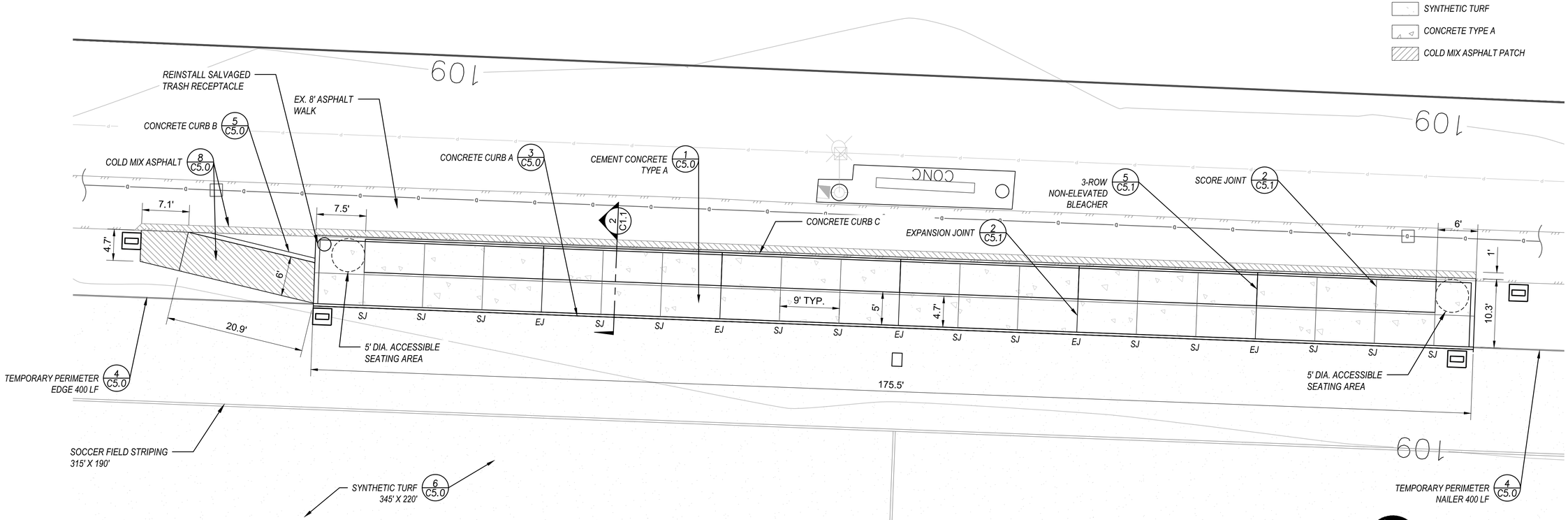

1 / C1.1 Spectator Area Site Plan Enlargement

SCALE: 1" = 8'-0"

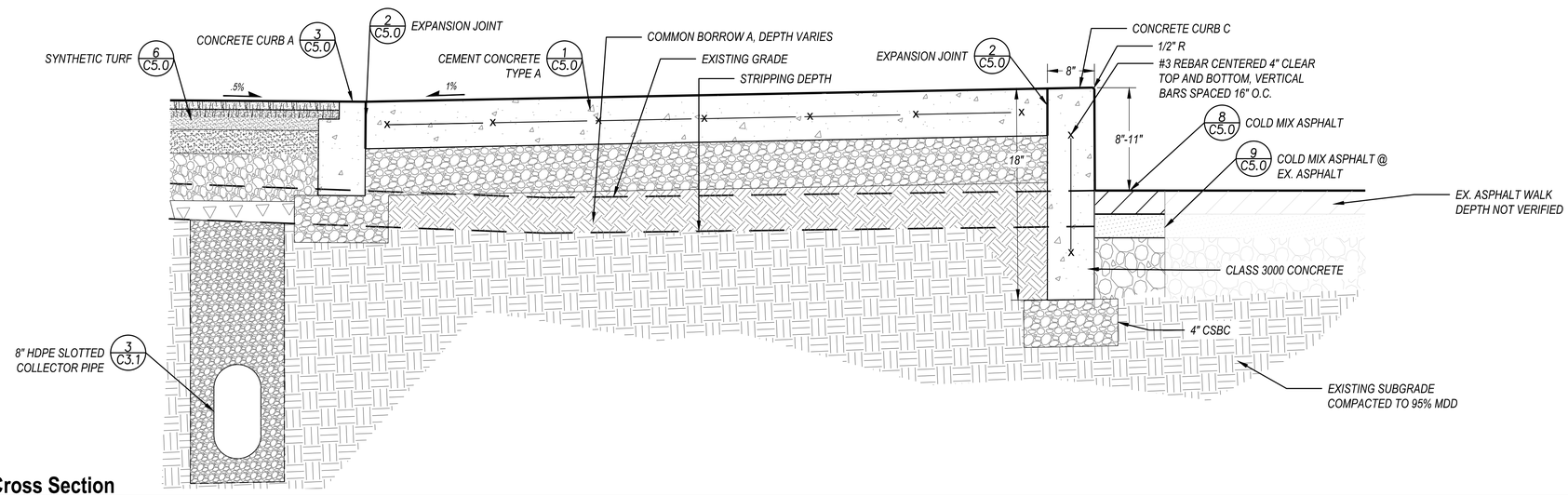

2 / C1.1 Spectator Area Cross Section

HORIZONTAL SCALE: 1" = 1'-0"
VERTICAL SCALE: 1" = 2'-0"

Strawberry Field Turf Conversion

City of Marysville
Washington

RWD
Landscape Architects
4405 7th Ave. SE, Suite 203
Lacey, WA 98503
360.456.3813
bob@rwdroll.com

PROJECT NO. 22015
DRAWING
DESIGNED BY BD
DRAWN BY JH
CHECKED BY BD

REVISION

DATE	CHANGE

DATE: 0000 00, 0000

60% SUBMITTAL

SPECTATOR AREA SITE PLAN ENLARGEMENT

Sheet C1.1

O:\2022\22015 Strawberry Fields Conversion Marysville\Drawings\Sheets\FIELD 2- SITE PLAN.dwg
Oct-31-22 2:17pm

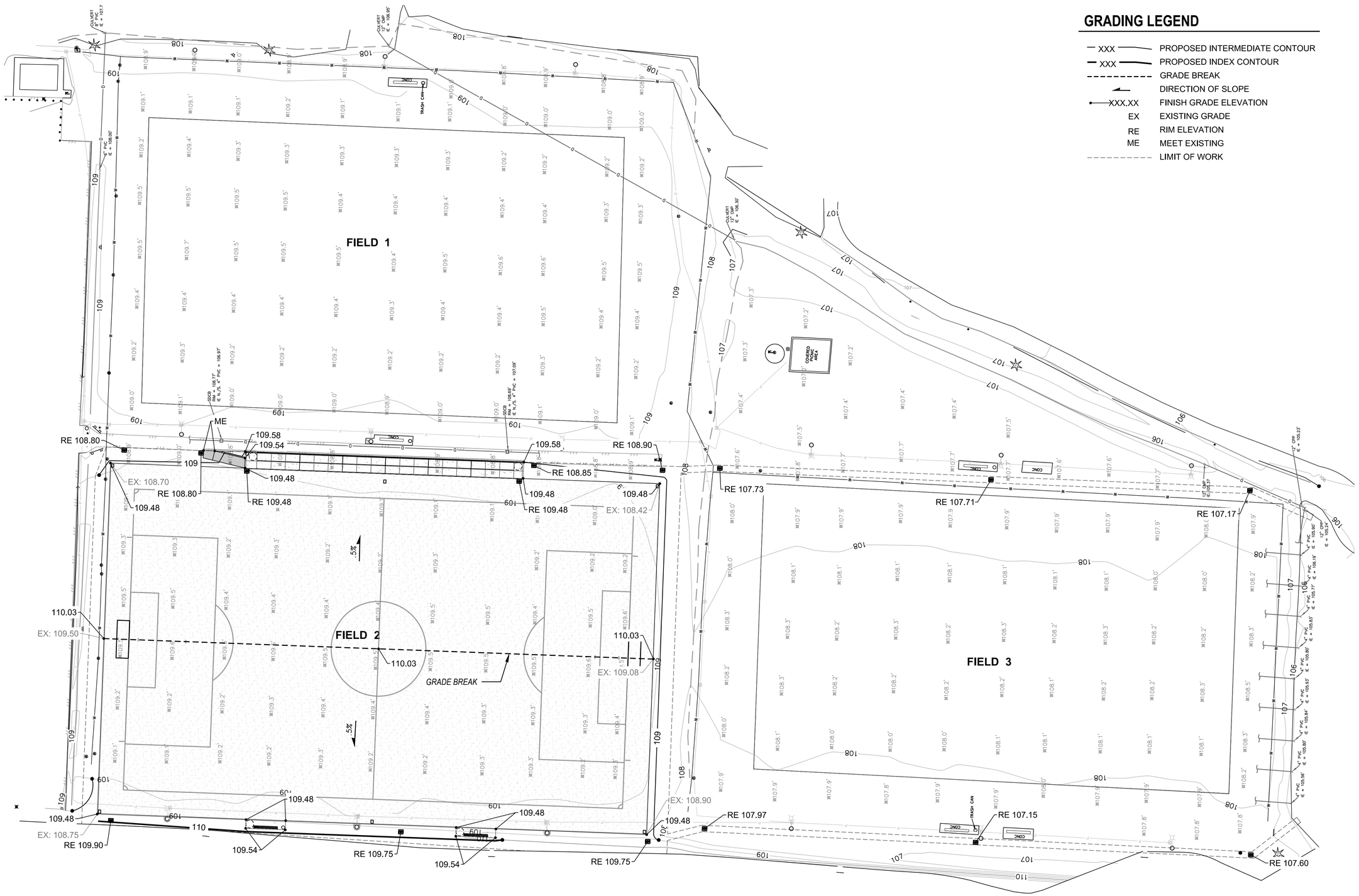

GRADING LEGEND

XXX	PROPOSED INTERMEDIATE CONTOUR
XXX	PROPOSED INDEX CONTOUR
	GRADE BREAK
	DIRECTION OF SLOPE
XXX.XX	FINISH GRADE ELEVATION
EX	EXISTING GRADE
RE	RIM ELEVATION
ME	MEET EXISTING
	LIMIT OF WORK

SCALE: 1"=30'

0 15' 30' 45' 60'

Call 811 two business days before you dig

Strawberry Field Turf Conversion

City of Marysville
Washington

RWD
Landscape Architects
4405 7th Ave. SE, Suite 203
Lacey, WA 98503
360.456.3813
bob@rwdroll.com

PROJECT NO. 22015
DRAWING
DESIGNED BY BD
DRAWN BY JH
CHECKED BY BD

REVISION

DATE	CHANGE

DATE: 0000 00, 0000

60% SUBMITTAL

GRADING PLAN FIELD 2

Sheet C2.0

O:\2022\22015 Strawberry Fields Conversion Marysville\Drawings\Sheets\FIELD 2- GRADING PLAN.dwg
Oct-31-22 2:15pm

GRADING LEGEND

XXX	PROPOSED INTERMEDIATE CONTOUR
XXX	PROPOSED INDEX CONTOUR
	GRADE BREAK
	DIRECTION OF SLOPE
XXX.XX	FINISH GRADE ELEVATION
EX	EXISTING GRADE
RE	RIM ELEVATION
ME	MEET EXISTING
	LIMIT OF WORK

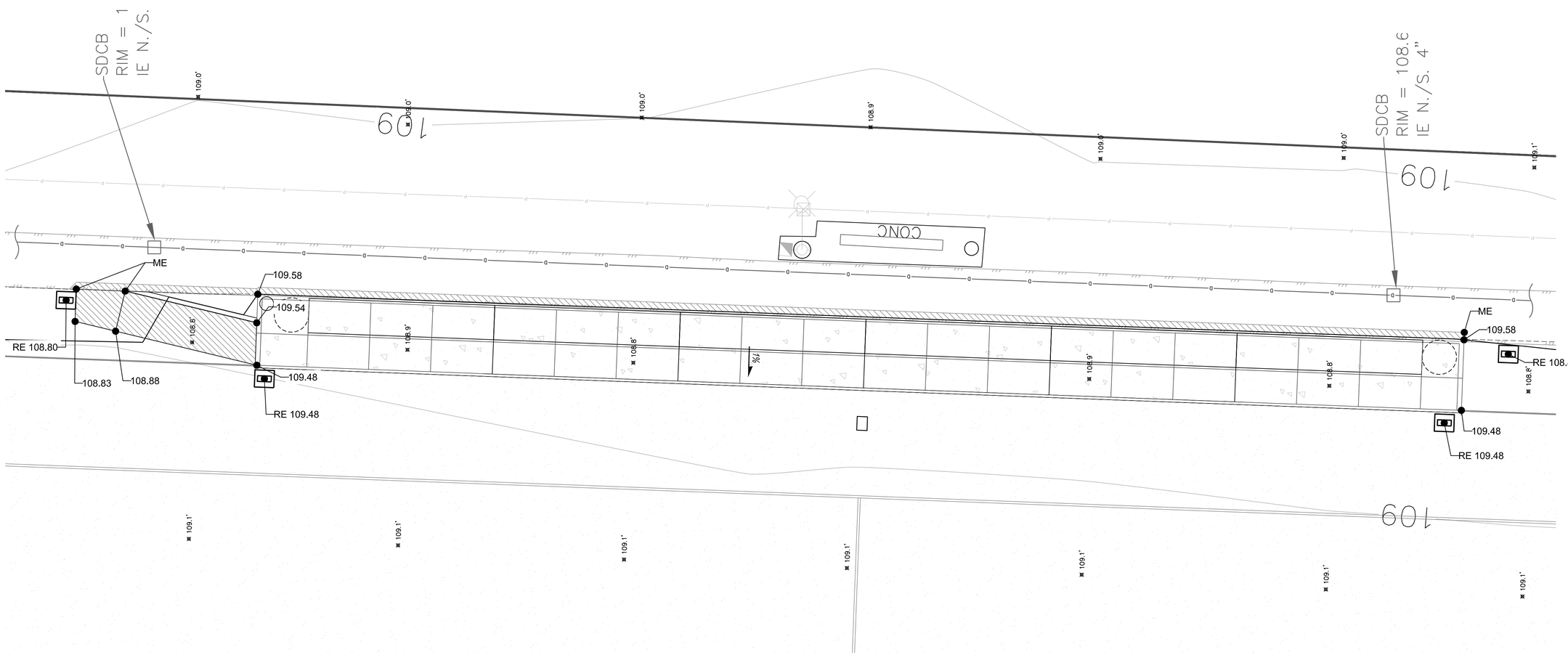

SCALE: 1"=8'-0"

0 4' 8' 12' 16'

Call 811 two business days before you dig

60% SUBMITTAL

Strawberry Field Turf Conversion

City of Marysville
Washington

RWD
Landscape Architects
4405 7th Ave. SE, Suite 203
Lacey, WA 98503
360.456.3813
bob@rwdroll.com

PROJECT NO. 22015
DRAWING
DESIGNED BY BD
DRAWN BY JH
CHECKED BY BD

REVISION

DATE	CHANGE

DATE: 0000 00, 0000

SPECTATOR AREA GRADING PLAN ENLARGEMENT

Sheet C2.1

O:\2022\22015 Strawberry Fields Conversion Marysville\Drawings\Sheets\FIELD 2- GRADING PLAN.dwg
Oct-31-22 2:15pm

DRAINAGE LEGEND:

- CATCH BASIN TYPE 1
- 12" FLAT DRAIN
- 8" HDPE SLOTTED COLLECTOR PIPE
- 10" HDPE SLOTTED COLLECTOR PIPE
- 12" HDPE SLOTTED COLLECTOR PIPE

FIELD 1

FIELD 2

FIELD 3

CB 15
TYPE 1 CATCH BASIN
RE 108.90
IE SOUTH 107.23

CB 14
TYPE 1 CATCH BASIN
RE 108.80
IE NORTH 107.12
IE SOUTH 107.12

CB 13
TYPE 1 CATCH BASIN W/
SYNTHETIC TURF LID
RE 109.48
IE NORTH 107.05
IE SOUTH 107.05

CB 12
TYPE 1 CATCH BASIN W/
SYNTHETIC TURF LID
RE 109.48
IE NORTH 106.63
IE SOUTH 106.63

CB 11
TYPE 1 CATCH BASIN
RE 108.85
IE NORTH 106.60
IE SOUTH 106.60

CB 9
TYPE 1 CATCH BASIN
RE 107.73
IE NORTH 106.32
IE SOUTH 106.32

CB 8
TYPE 1 CATCH BASIN
RE 107.71
IE NORTH 105.90
IE SOUTH 105.90

CB 7
TYPE 1 CATCH BASIN
RE 107.17
IE NORTH 105.50
IE SOUTH 105.50

CB 10
TYPE 1 CATCH BASIN
RE 108.90
IE NORTH 106.40
IE SOUTH 106.40
IE WEST 106.40

CB 6
TYPE 1 CATCH BASIN
RE 109.90
IE SOUTH 108.07

CB 5
TYPE 1 CATCH BASIN
RE 109.75
IE NORTH 107.12
IE SOUTH 107.12

CB 4
TYPE 1 CATCH BASIN
RE 109.75
IE NORTH 106.31
IE EAST 106.31
IE SOUTH 106.31

CB 3
TYPE 1 CATCH BASIN
RE 107.97
IE NORTH 106.14
IE SOUTH 106.14

CB 2
TYPE 1 CATCH BASIN
RE 107.15
IE NORTH 105.72
IE SOUTH 105.72

CB 1
TYPE 1 CATCH BASIN
RE 107.60
IE NORTH 105.29
IE SOUTH 105.29

8" HDPE SLOTTED COLLECTOR PIPE @ .25%

12" HDPE SLOTTED COLLECTOR PIPE @ .25%

12" STORM SEWER OUTFALL @ 105.41

12" STORM SEWER OUTFALL @ 105.20

PIPE CLEANOUT

GRADE BREAK

8" HDPE SLOTTED COLLECTOR PIPE @ .5%

10" HDPE SLOTTED COLLECTOR PIPE @ .25%

8" HDPE SLOTTED COLLECTOR PIPE @ .53%

12" FLAT DRAIN

10" HDPE SLOTTED COLLECTOR PIPE @ .25%

SCALE: 1"=30'

0 15' 30' 45' 60'

Call 811 two business days before you dig

60% SUBMITTAL

Strawberry Field Turf Conversion

City of Marysville
Washington

RWD
Landscape Architects
4405 7th Ave. SE, Suite 203
Lacey, WA 98503
360.456.3813
bob@rwdroll.com

PROJECT NO. 22015
DRAWING
DESIGNED BY BD
DRAWN BY JH
CHECKED BY BD

REVISION

DATE	CHANGE

DATE: 0000 00, 0000

DRAINAGE PLAN FIELD 2

Sheet C3.0

O:\2022\22015 Strawberry Fields Conversion Marysville\Drawings\Sheets\FIELD 2- DRAINAGE PLAN.dwg
Oct-31-22 2:14pm

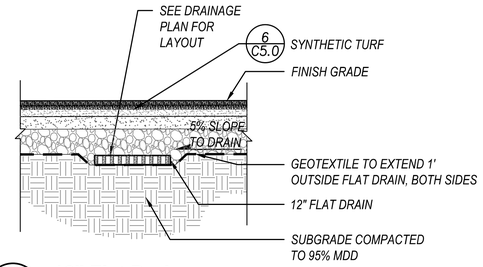

1 / C3.1 12" Flat Drain

SCALE: 1" = 1'-0"

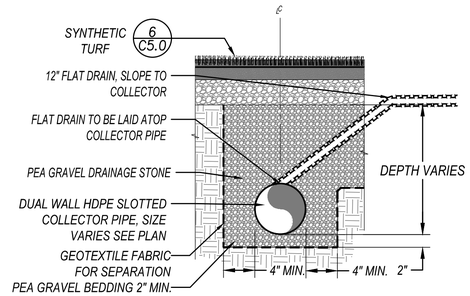

2 / C3.1 Flat Drain Connection to Collector

SCALE: 1" = 1'-0"

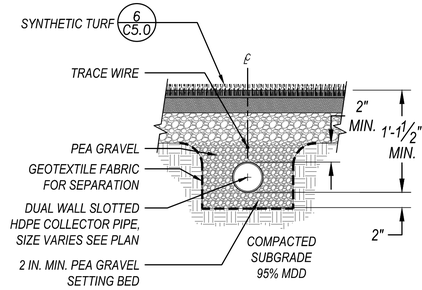

Collector Pipe Under Field

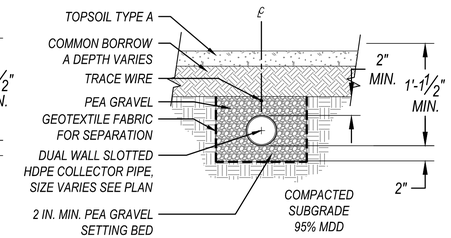

Collector Pipe Outside of Field

3 / C3.1 HDPE Slotted Collector Pipe

SCALE: 1" = 1'-0"

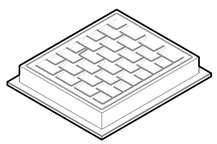

FRAME AND VANED GRATE OR RECTANGULAR SOLID CAST IRON COVER

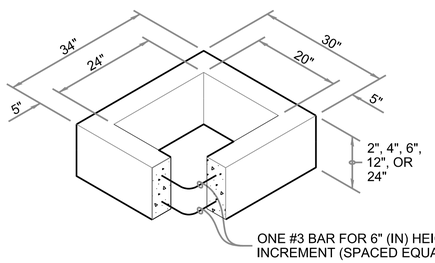

RECTANGULAR ADJUSTMENT SECTION

PIPE ALLOWANCES	
PIPE MATERIAL	MAXIMUM INSIDE DIAMETER (INCHES)
REINFORCED OR PLAIN CONCRETE	12"
ALL METAL PIPE	15"
CPSSP **(STD. SPEC. SECT. 9-05.20)**	12"
SOLID WALL PVC **(STD. SPEC. SECT. 9-05.12(1))**	15"
PROFILE WALL PVC **(STD. SPEC. SECT. 9-05.12(2))**	15"

* CORRUGATED POLYETHYLENE STORM SEWER PIPE

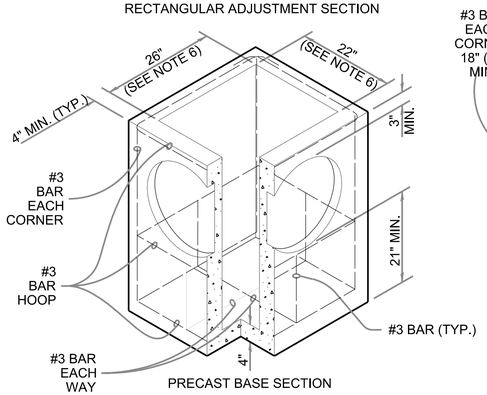

PRECAST BASE SECTION

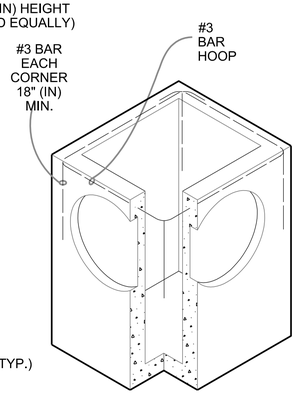

(SEE NOTE 1)

ALTERNATIVE PRECAST BASE SECTION

NOTES

1. AS ACCEPTABLE ALTERNATIVES TO THE REBAR SHOWN IN THE **PRECAST BASE SECTION**, FIBERS (PLACED ACCORDING TO THE STANDARD SPECIFICATIONS), OR WIRE MESH HAVING A MINIMUM AREA OF 0.12 SQUARE INCHES PER FOOT SHALL BE USED WITH THE MINIMUM REQUIRED REBAR SHOWN IN THE **ALTERNATIVE PRECAST BASE SECTION.** WIRE MESH SHALL NOT BE PLACED IN THE KNOCKOUTS.
2. THE KNOCKOUT DIAMETER SHALL NOT BE GREATER THAN 20" (IN). KNOCKOUTS SHALL HAVE A WALL THICKNESS OF 2" (IN) MINIMUM TO 2.5" (IN) MAXIMUM. PROVIDE A 1.5" (IN) MINIMUM GAP BETWEEN THE KNOCKOUT WALL AND THE OUTSIDE OF THE PIPE. AFTER THE PIPE IS INSTALLED, FILL THE GAP WITH JOINT MORTAR IN ACCORDANCE WITH **STANDARD SPECIFICATION SECTION 9-04.3**.
3. THE MAXIMUM DEPTH FROM THE FINISHED GRADE TO THE LOWEST PIPE INVERT SHALL BE 5' (FT).
4. THE FRAME AND GRATE MAY BE INSTALLED WITH THE FLANGE DOWN, OR INTEGRALLY CAST INTO THE ADJUSTMENT SECTION WITH FLANGE UP.
5. THE PRECAST BASE SECTION MAY HAVE A ROUNDED FLOOR, AND THE WALLS MAY BE SLOPED AT A RATE OF 1 : 24 OR STEEPER.
6. THE OPENING SHALL BE MEASURED AT THE TOP OF THE **PRECAST BASE SECTION**.
7. ALL PICKUP HOLES SHALL BE GROUTED FULL AFTER THE BASIN HAS BEEN PLACED.

4 / C3.1 Catch Basin Type 1

SCALE: 1" = 1'-0"

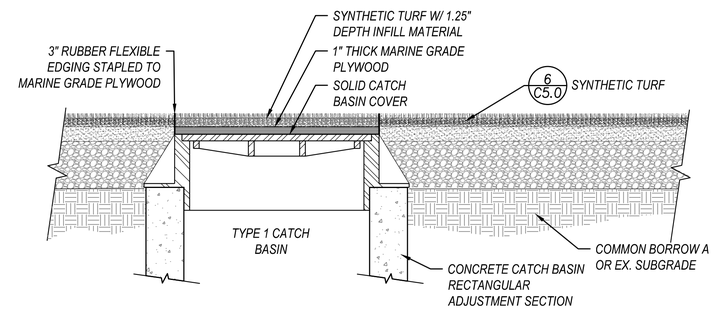

5 / C3.1 Catch Basin W/ Synthetic Turf Lid

SCALE: 1" = 1'-0"

Strawberry Field Turf Conversion

City of Marysville
Washington

RWD
Landscape Architects
4405 7th Ave. SE, Suite 203
Lacey, WA 98503
360.456.3813
bob@rwdroll.com

PROJECT NO. 22015
DRAWING
DESIGNED BY BD
DRAWN BY JH
CHECKED BY BD

REVISION

DATE	CHANGE

DATE: 0000 00, 0000

60% SUBMITTAL

DRAINAGE DETAILS

Sheet C3.1

O:\2022\22015 Strawberry Fields Conversion Marysville\Drawings\Sheets\SITE DETAILS.dwg
Oct-31-22 2:21pm

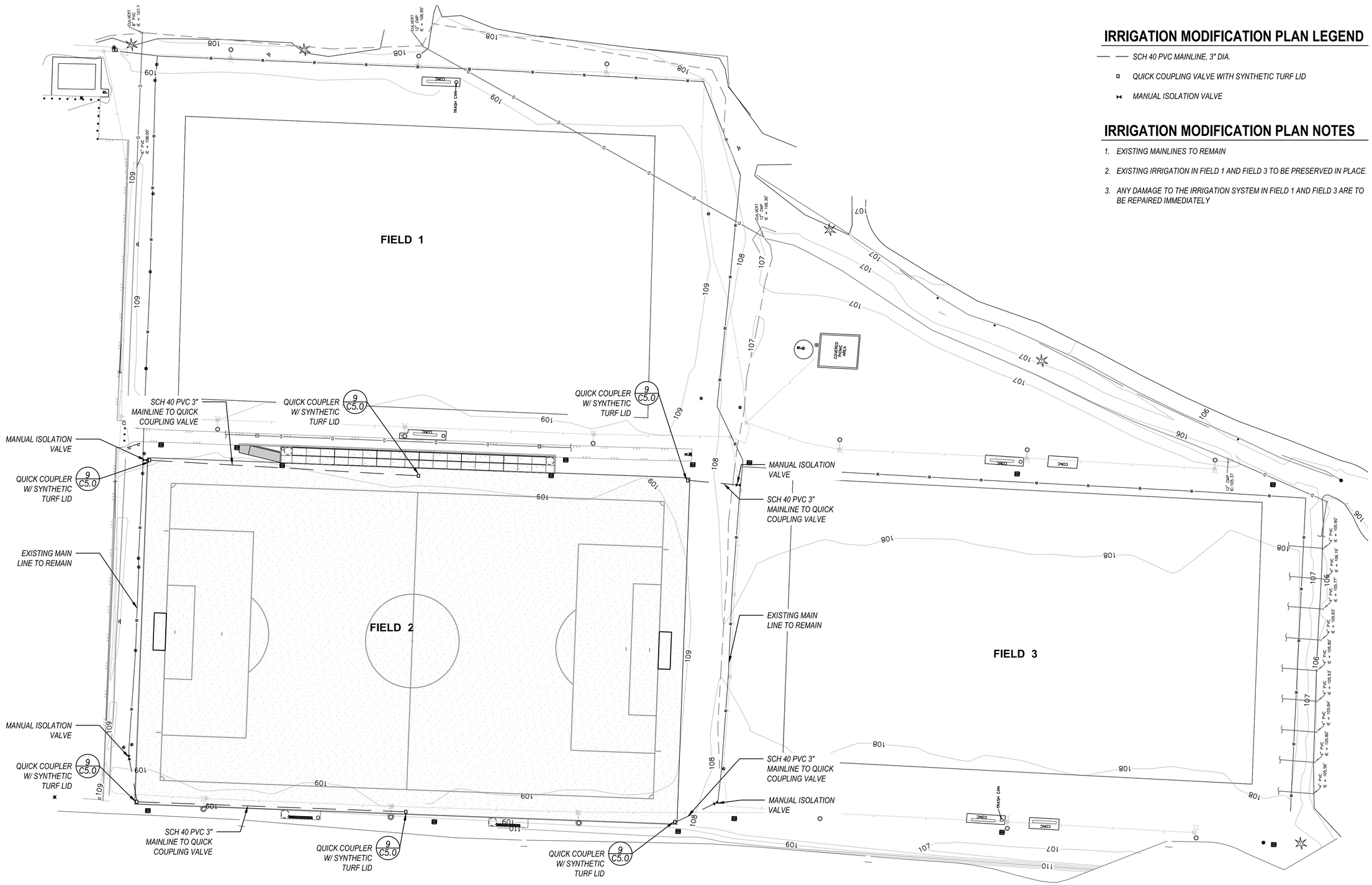

IRRIGATION MODIFICATION PLAN LEGEND

- SCH 40 PVC MAINLINE, 3" DIA.
- QUICK COUPLING VALVE WITH SYNTHETIC TURF LID
- MANUAL ISOLATION VALVE

IRRIGATION MODIFICATION PLAN NOTES

1. EXISTING MAINLINES TO REMAIN
2. EXISTING IRRIGATION IN FIELD 1 AND FIELD 3 TO BE PRESERVED IN PLACE.
3. ANY DAMAGE TO THE IRRIGATION SYSTEM IN FIELD 1 AND FIELD 3 ARE TO BE REPAIRED IMMEDIATELY

SCALE: 1"=30'

0 15' 30' 45' 60'

811 Call 811 two business days before you dig

Strawberry Field Turf Conversion

City of Marysville
Washington

RWD
Landscape Architects
4405 7th Ave, SE, Suite 203
Lacey, WA 98503
360.456.3813
bob@rwdroll.com

PROJECT NO. 22015
DRAWING
DESIGNED BY BD
DRAWN BY JH
CHECKED BY BD

REVISION

DATE	CHANGE

DATE: 0000 00, 0000

60% SUBMITTAL

IRRIGATION MODIFICATION PLAN FIELD 2

Sheet C4.0

0:\2022\22015 Strawberry Fields Conversion Marysville\Drawings\Sheets\FIELD 2-IRRIGATION PLAN.dwg
Oct-31-22 2:19pm

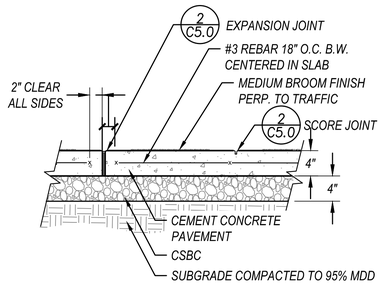

1 C5.0 Cement Concrete Type A

SCALE: 1" = 1'-0"

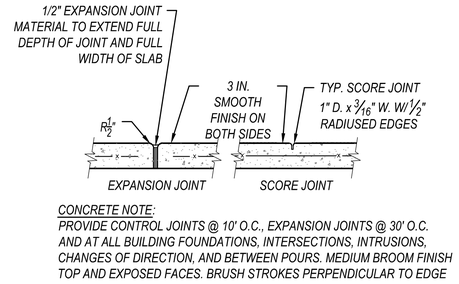

CONCRETE NOTE:
PROVIDE CONTROL JOINTS @ 10' O.C., EXPANSION JOINTS @ 30' O.C. AND AT ALL BUILDING FOUNDATIONS, INTERSECTIONS, INTRUSIONS, CHANGES OF DIRECTION, AND BETWEEN POURS. MEDIUM BROOM FINISH TOP AND EXPOSED FACES. BRUSH STROKES PERPENDICULAR TO EDGE

2 C5.0 Expansion and Score Joints

SCALE: 1" = 1'-0"

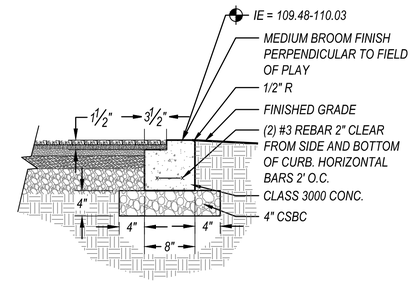

3 C5.0 Concrete Curb A

SCALE: 1" = 1'-0"

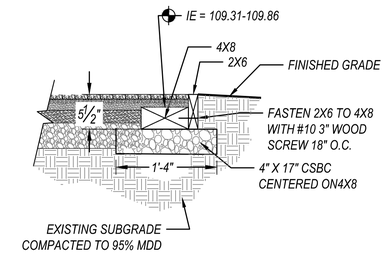

4 C5.0 Temporary Perimeter Edge

SCALE: 1" = 1'-0"

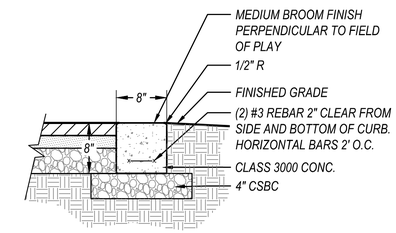

5 C5.0 Concrete Curb B

SCALE: 1" = 1'-0"

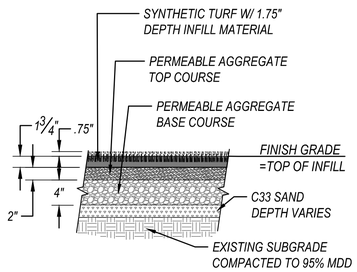

6 C5.0 Synthetic Turf

SCALE: 1" = 1'-0"

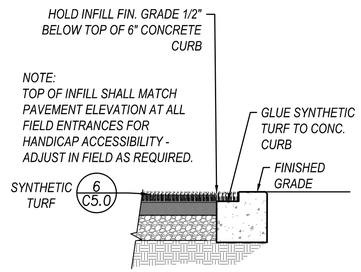

7 C5.0 Synthetic Turf at Concrete Curb

SCALE: 1" = 1'-0"

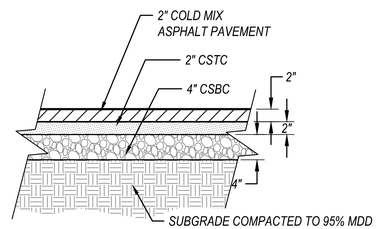

8 C5.0 Cold Mix Asphalt

SCALE: 1" = 1'-0"

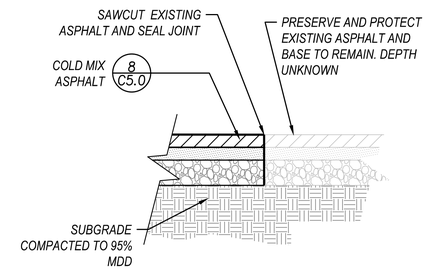

9 C5.0 Cold Mix Asphalt @ Ex. Asphalt

SCALE: 1" = 1'-0"

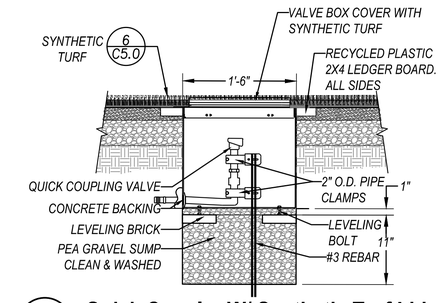

10 C5.0 Quick Coupler W/ Synthetic Turf Lid

SCALE: 1" = 1'-0"

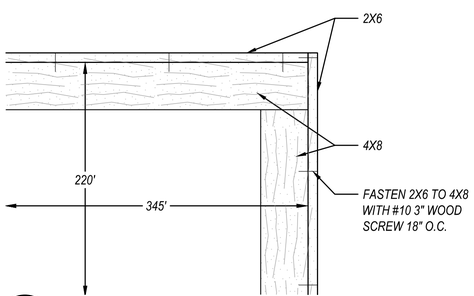

11 C5.0 Temporary Perimeter Edge Corner

SCALE: 1" = 1'-0"

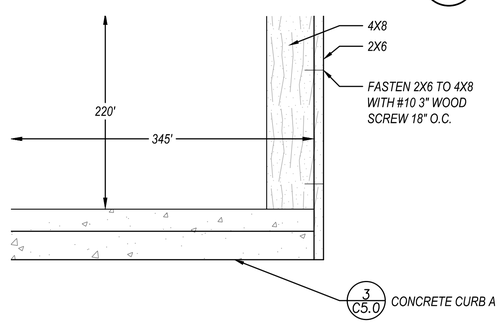

12 C5.0 Temporary Perimeter Edge @ Concrete Curb A

SCALE: 1" = 1'-0"

Strawberry Field Turf Conversion

City of Marysville
Washington

RWD
Landscape Architects
4405 7th Ave. SE, Suite 203
Lacey, WA 98503
360.456.3813
bob@rwdroll.com

PROJECT NO. 22015
DRAWING
DESIGNED BY BD
DRAWN BY JH
CHECKED BY BD

REVISION

DATE	CHANGE

DATE: 0000 00, 0000

60% SUBMITTAL

SITE DETAILS

Sheet C5.0

O:\2022\22015 Strawberry Fields Conversion Marysville\Drawings\Sheets\SITE DETAILS.dwg
Oct-31-22 2:22pm

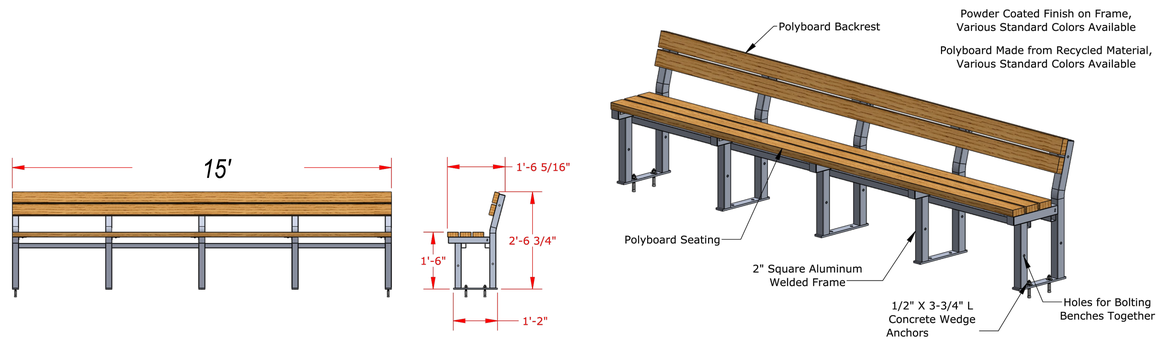

1 / C5.1 Team Bench A

SCALE: NOT TO SCALE

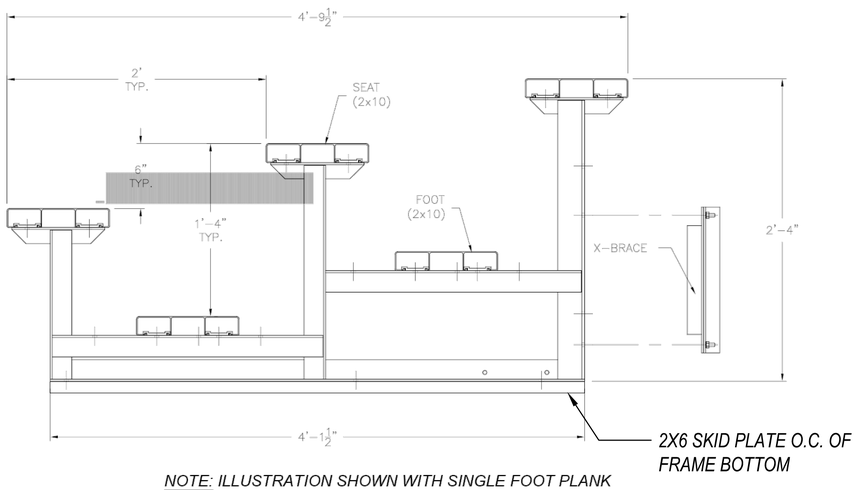

NOTE: ILLUSTRATION SHOWN WITH SINGLE FOOT PLANK AND NO RISER. PLEASE REFER TO ATTACHED SPECIFICATIONS FOR FEATURES INCLUDED WITH YOUR SPECIFIC BLEACHER.

2 / C5.1 3-Row x 27' Non-Elevated Bleacher

SCALE: NOT TO SCALE

SPORTSFIELD SPECIALTIES
WWW.SPORTSFIELD.COM

Excellence from Design to Installation

41155 State Highway 10, PO Box 231, Delhi, NY 13753 CALL: 888-975-3343 FAX: 607-746-8481

United States Patent #7,331,880, Issued February 19, 2008
United States Patent #7,527,569, Issued May 5, 2009
United States Patent #8,777,784, Issued July 15, 2014

Optional Equipment:
SGWKL5 - Levered Soccer Goal with Skids External Wheel Kit
SG2S® - Soccer Goal Safety System

Meets and exceeds ASTM F2950-14 Standard Safety and Performance Specification for Soccer Goals and ASTM F1938-98 Standard Guide for Safer Use of Movable Soccer Goals

Standard White Powder Coated Finish

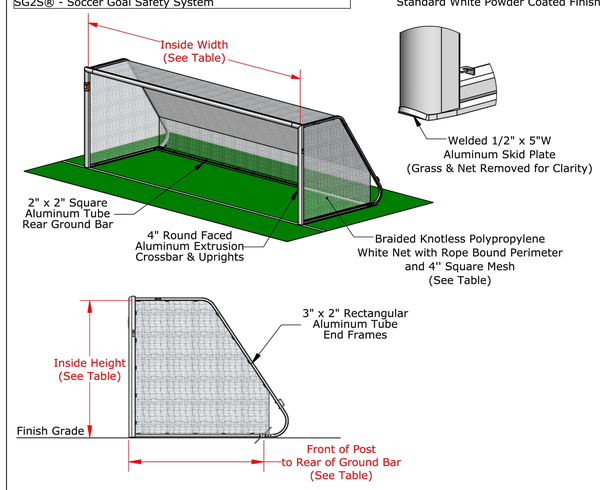

Part No.	Size	Inside Height	Inside Width	Front of Post to Rear of Ground Bar	Net Twine Diameter
SG824RS	Regulation	8'-0"	24'-0"	8'-0" or 8'-4"	5 mm
SG721RS	Youth	7'-0"	21'-0"	7'-0"	3 mm
SG618RS	Youth	6'-6"	18'-6"	7'-0"	3 mm

PROPRIETARY AND CONFIDENTIAL
THE INFORMATION CONTAINED IN THIS DRAWING IS THE SOLE PROPERTY OF SPORTSFIELD SPECIALTIES INC. ANY REPRODUCTION IN PART OR AS A WHOLE WITHOUT THE WRITTEN PERMISSION OF SPORTSFIELD SPECIALTIES INC. IS PROHIBITED.

Round Faced Soccer Goal with Skids

Not To Scale — Sportsfield Specialties Inc 12172020

SPORTSFIELD SPECIALTIES
WWW.SPORTSFIELD.COM
Excellence from Design to Installation
41155 State Highway 10, PO Box 231, Delhi, NY 13753 CALL: 888-975-3343 FAX: 607-746-8481

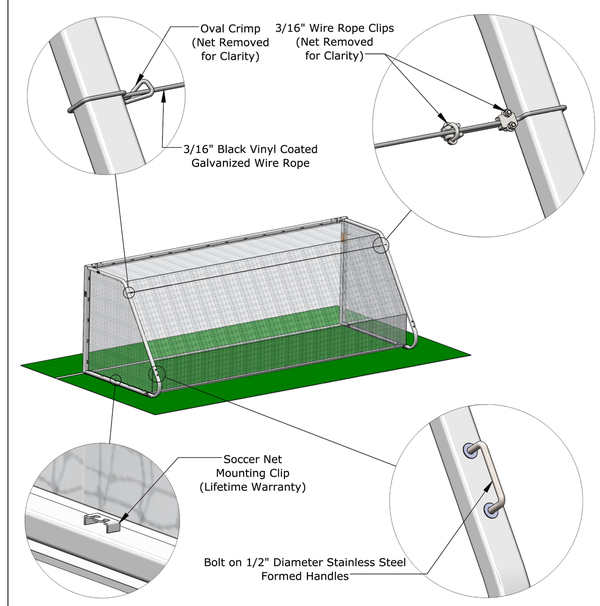

PROPRIETARY AND CONFIDENTIAL
THE INFORMATION CONTAINED IN THIS DRAWING IS THE SOLE PROPERTY OF SPORTSFIELD SPECIALTIES INC. ANY REPRODUCTION IN PART OR AS A WHOLE WITHOUT THE WRITTEN PERMISSION OF SPORTSFIELD SPECIALTIES INC. IS PROHIBITED.

Round Faced Soccer Goal with Skids

Not To Scale — Sportsfield Specialties Inc 12172020

3 / C5.1 Rounded Faced Soccer Goal

SCALE: NOT TO SCALE

Strawberry Field Turf Conversion

City of Marysville
Washington

RWD
Landscape Architects
4405 7th Ave. SE, Suite 203
Lacey, WA 98503
360.456.3813
bob@rwdroll.com

PROJECT NO. 22015
DRAWING
DESIGNED BY BD
DRAWN BY JH
CHECKED BY BD

REVISION

DATE	CHANGE

DATE: 0000 00, 0000

60% SUBMITTAL

SITE DETAILS

Sheet C5.1

O:\2022\22015 Strawberry Fields Conversion Marysville\Drawings\Sheets\SITE DETAILS.dwg
Oct-31-22 2:22pm

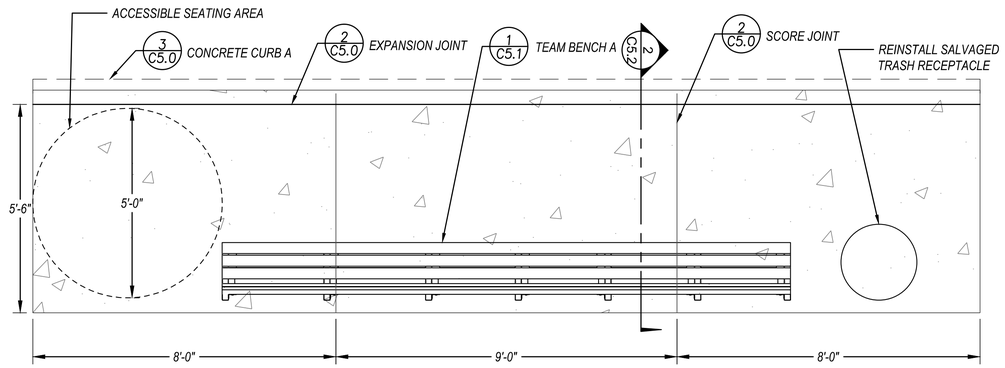

1 C5.2 Team Bench Enlargement

SCALE: 1" = 1'-0"

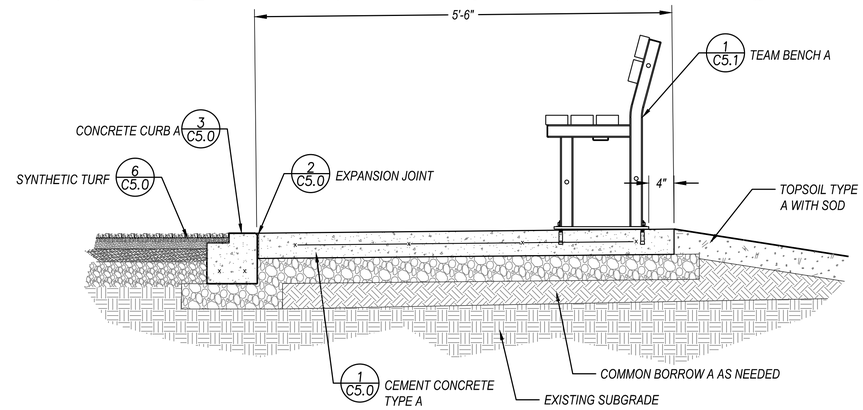

2 C5.2 Team Bench Section

SCALE: 1" = 1'-0"

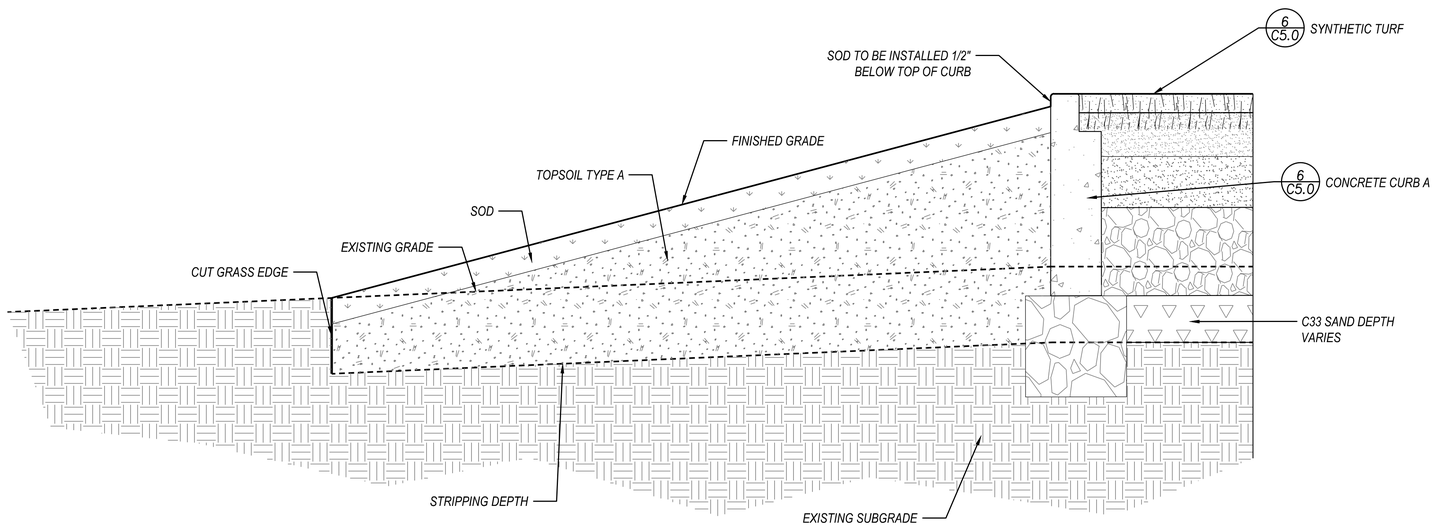

3 C5.2 Restoration Section

HORIZONTAL SCALE: 1" = 1'-0"
VERTICAL SCALE: 1" = 4'-0"

Strawberry Field Turf Conversion

City of Marysville
Washington

RWD
Landscape Architects
4405 7th Ave. SE, Suite 203
Lacey, WA 98503
360.456.3813
bob@rwdroll.com

PROJECT NO. 22015
DRAWING
DESIGNED BY BD
DRAWN BY JH
CHECKED BY BD

REVISION

DATE	CHANGE

DATE: 0000 00, 0000

60% SUBMITTAL

SITE DETAILS

Sheet C5.2

O:\2022\22015 Strawberry Fields Conversion Marysville\Drawings\Sheets\SITE DETAILS.dwg
Oct-31-22 2:23pm

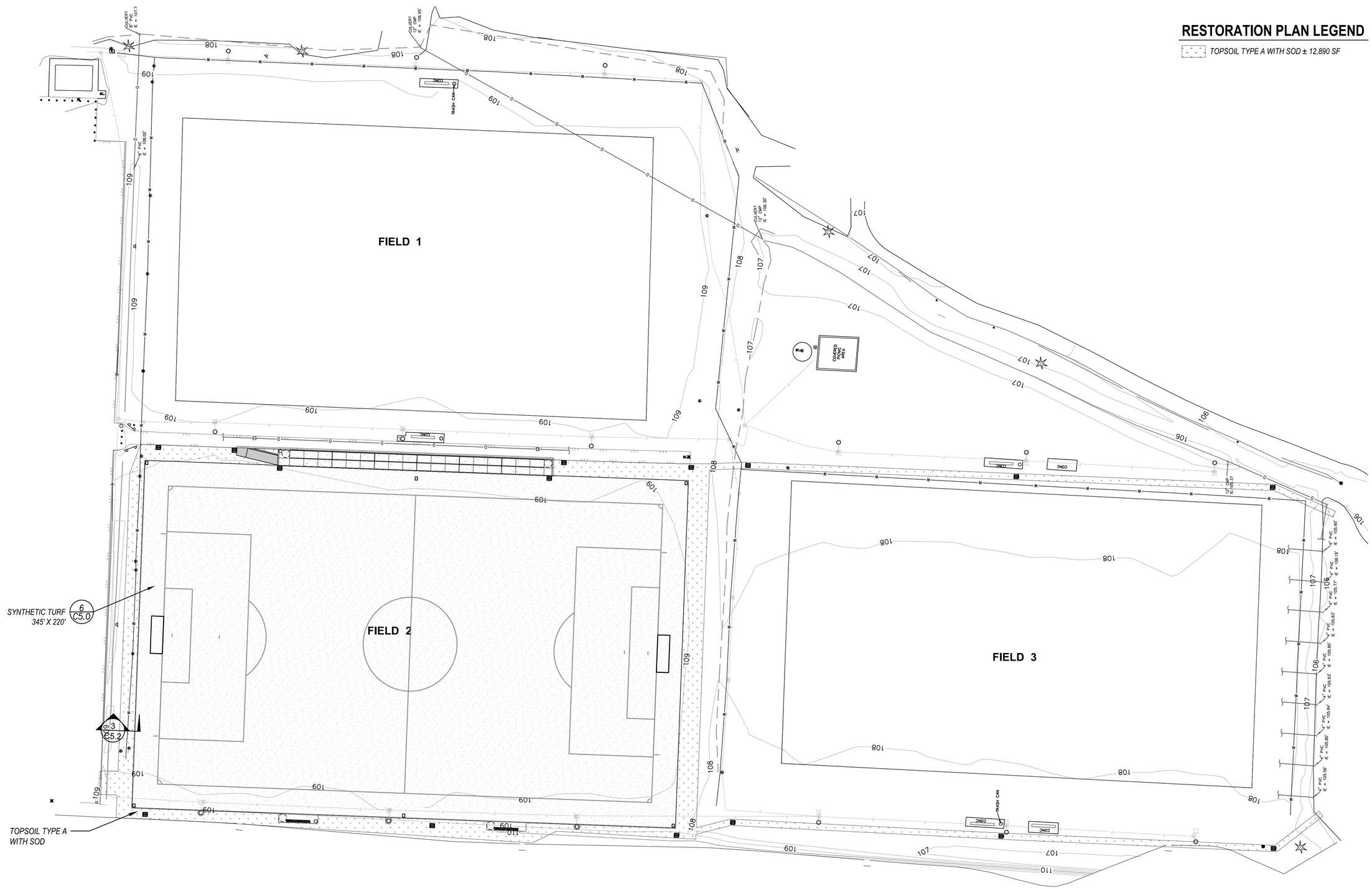

RESTORATION PLAN LEGEND

TOPSOIL TYPE A WITH SOD ± 12,890 SF

SCALE: 1"=30'

0 15' 30' 45' 60'

Call 811 two business days before you dig

Strawberry Field Turf Conversion

City of Marysville
Washington

RWD
Landscape Architects
4405 7th Ave. SE, Suite 203
Lacey, WA 98503
360.456.3813
bob@rwdroll.com

PROJECT NO. 22015
DRAWING
DESIGNED BY BD
DRAWN BY JH
CHECKED BY BD

REVISION

DATE	CHANGE

DATE: 0000 00, 0000

60% SUBMITTAL

RESTORATION PLAN FIELD 2

Sheet L1.0

O:\2022\22015 Strawberry Fields Conversion Marysville\Drawings\Sheets\FIELD 2- RESTORATION PLAN.dwg
Oct-31-22 2:16pm